CIVIL CONSTRUCTION PLANS
FOR
CORZINE DRIVE
STORM DRAIN IMPROVEMENTS

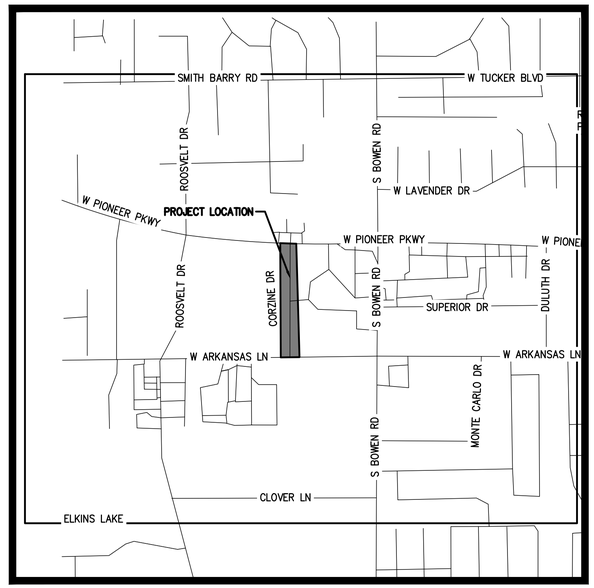

VICINITY MAP
NOT TO SCALE

Sheet List Table	
Sheet Number	Sheet Title
C1.0	COVER SHEET
C1.1	GENERAL NOTES & SITE MAP
C2.1	DEMOLITION PLAN
C3.1	PAVING PLAN
C4.1	GRADING PLAN
C4.2	GRADING PLAN
C5.1	DRAINAGE AREA MAP
C5.2	DRAINAGE CALCULATIONS
C5.3	HYDRAULIC CALCULATIONS
C6.1	STORM PLAN AND PROFILE
C6.2	STORM PLAN AND PROFILE
C6.3	STORM PLAN AND PROFILE
C7.1	EROSION CONTROL PLAN
C7.2	EROSION CONTROL DETAILS
C8.1	GRATE INLET RISER & JUNCTION BOX DETAILS
C8.2	4'X4' JUNCTION BOX DETAILS
C8.3	SLOTTED DRAIN DETAIL
C8.4	SLOTTED DRAIN DETAIL

IN
DALWORTHINGTON GARDENS, TX
TARRANT COUNTY

PERMIT SET
MAY 2023

ENGINEER/SURVEYOR:

TOPOGRAPHIC, INC.
481 WINSCOTT RD, STE. 200.
BENBROOK, TEXAS 76126
CONTACT: KYLON M. WILSON, P.E.
PHONE: 817-744-7512

OWNER:

GARY PARKER
PUBLIC WORKS DIRECTOR
CITY OF DALWORTHINGTON GARDENS
2600 ROOSEVELT DRIVE
GPARKER@CITYOFDWG.NET

PREPARED BY:

TOPOGRAPHIC
LOYALTY INNOVATION LEGACY
481 WINSCOTT RD, STE. 200 • BENBROOK, TEXAS 76126
TELEPHONE: (817) 744-7512 • FAX (817) 744-7554
TEXAS FIRM REGISTRATION NO. 18409
TEXAS FIRM REGISTRATION NO. 10042504
WWW.TOPOGRAPHIC.COM

TOPOGRAPHIC
LOYALTY INNOVATION LEGACY
481 WINSCOTT RD, STE. 200 • BENBROOK, TEXAS 76126
TELEPHONE: (817) 744-7512 • FAX (817) 744-7554
TEXAS FIRM REGISTRATION NO. 18409
TEXAS FIRM REGISTRATION NO. 10042504
WWW.TOPOGRAPHIC.COM

CORZINE DRIVE STORM DRAIN IMPROVEMENTS
DALWORTHINGTON GARDENS, TARRANT COUNTY, TX

COVER SHEET

NO.	DATE	REVISION DESCRIPTION

PRELIMINARY, THIS DRAWING SHALL NOT BE RECORDED FOR ANY PURPOSE AND SHALL NOT BE USED OR VIEWED OR RELIED UPON AS FINAL CONSTRUCTION DRAWINGS.

PLANS PREPARED UNDER THE DIRECT SUPERVISION OF KYLON M. WILSON, P.E. TEXAS REGISTRATION NO. 77520

SHEET NO.
C1.0

S:\CIVIL\DALWORTHINGTON_GARDENS\CIP_2021\CIVIL\CORZINE\CIVIL\PLAN_SHEETS\CZ-COVER.DWG 5/23/2023 3:51 PM daniel.tirado

SITE MAP

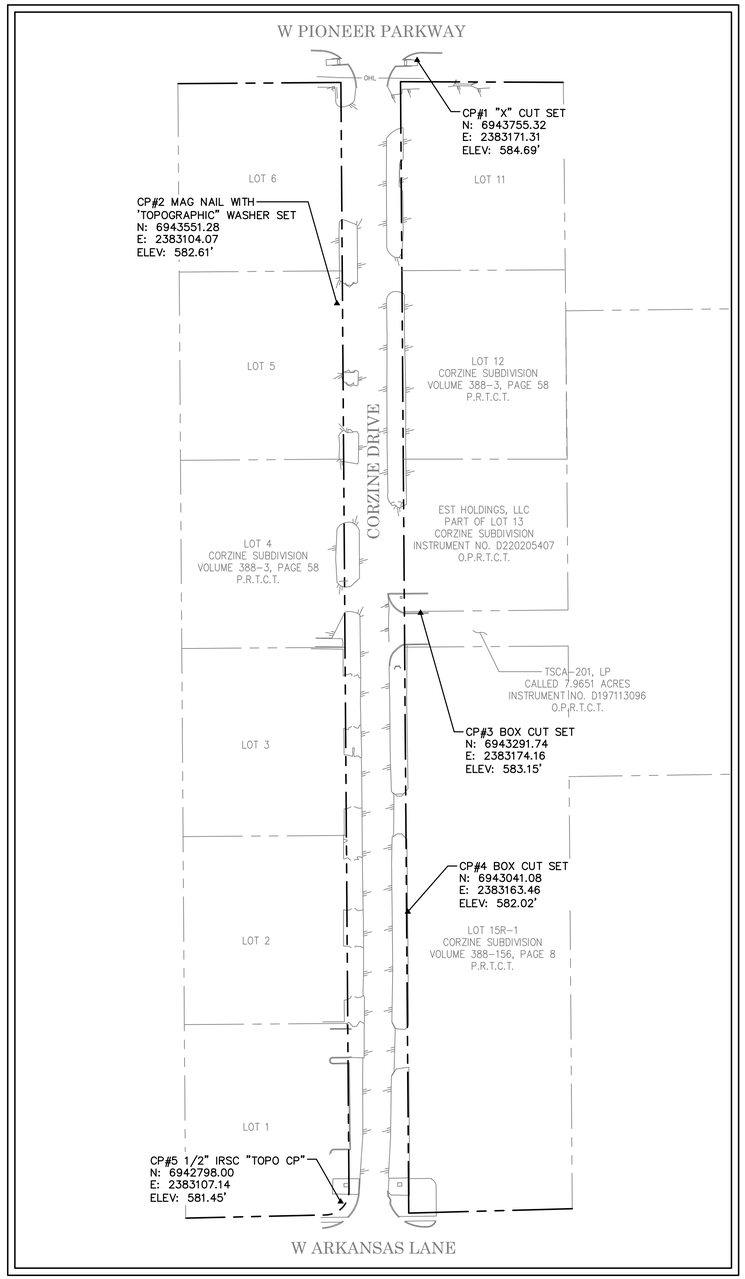

GENERAL NOTES:

1. THE EXISTING UTILITIES ARE SHOWN FOR REFERENCE ONLY. THEIR LOCATIONS ARE APPROXIMATE AND NOT TO BE CONSIDERED AS ACCURATE NOR ALL INCLUSIVE. THE CONTRACTOR SHALL VERIFY THE LOCATION OF ALL UTILITIES PRIOR TO CONSTRUCTION.
2. FOR UTILITY LINE LOCATIONS, CALL DIGTESS (TEXAS811).
3. THE CONTRACTOR SHALL BE RESPONSIBLE FOR REPAIRING ANY DAMAGED EXISTING UTILITIES AT HIS EXPENSE.
4. CONSTRUCTION STAKING SHALL BE THE RESPONSIBILITY OF THE CONTRACTOR. CONTROL POINTS ARE FURNISHED FOR THE CONTRACTOR'S USE TO STAKE THE PROPOSED IMPROVEMENTS. HE SHALL BE RESPONSIBLE FOR PROTECTING THESE POINTS AND TRANSFERRING THEM TO AN AREA OUTSIDE OF THE CONSTRUCTION LIMITS IF NECESSARY.
5. SOME SUGGESTED EROSION CONTROL MEASURES ARE SHOWN ON THESE PLANS. HOWEVER, THE CONTRACTOR IS RESPONSIBLE FOR PROVIDING A STORM WATER POLLUTION PREVENTION PLAN AND SUBMITTING ALL REQUIRED TPDES DOCUMENTATION, INCLUDING N.O.I. AND N.O.T. FORMS, AND MEETING ALL REQUIREMENTS OF THE TCEQ REGULATIONS.
6. EXCESS EXCAVATED MATERIAL SHALL BE SPREAD ON SITE AT THE DIRECTION OF THE OWNER/ENGINEER. LARGE ROCKS (3" & LARGER) SHALL BE HAULED OFF SITE AT THE CONTRACTOR'S EXPENSE.
7. THE CONTRACTOR SHALL RETURN ALL EXCAVATED AREAS, FENCES, UTILITIES, PAVED AREAS, ETC., TO THEIR PRECONSTRUCTION CONDITION OR BETTER. THIS WORK SHALL BE CONSIDERED INCIDENTAL AND NOT A SEPARATE BID ITEM, UNLESS OTHERWISE SHOWN ON THE BID SCHEDULE.
8. THE CONTRACTOR SHALL MAINTAIN ADEQUATE DRAINAGE AT ALL TIMES AND SHALL BE RESPONSIBLE FOR ALL STORM WATER CONTROL, PUMPING, AND DEWATERING NECESSARY FOR THE CONSTRUCTION OF THIS PROJECT. THIS WORK SHALL BE CONSIDERED INCIDENTAL AND NOT A SEPARATE PAY ITEM.
9. ALL DIMENSIONS ARE TO EDGE OF PAVEMENT AND CENTER OF PIPE UNLESS OTHERWISE NOTED.
10. THE CONTRACTOR SHALL MAINTAIN A 2' SEPARATION DISTANCE BETWEEN WATER LINES AND STORM DRAINS.
11. ALL VALVE BOXES AND CLEAN OUTS OR OTHER APPURTENANCES REMAINING WITHIN THE CONSTRUCTION AREA SHALL BE ADJUSTED FLUSH WITH THE PROPOSED GRADE.
12. THE CONTRACTOR SHALL BE RESPONSIBLE FOR THE INSTALLATION OF SOD AND ESTABLISHING GRASS IN THE AREAS OF DISTURBED SOIL.

UTILITY CONTACTS:

THE LOCATION AND DIMENSIONS OF EXISTING UTILITIES SHOWN ON THE PLANS ARE APPROXIMATE. IT IS THE CONTRACTOR'S RESPONSIBILITY TO VERIFY LOCATION, DEPTH, AND DIMENSION OF EXISTING UTILITIES PRIOR TO CONSTRUCTION.

ONCOR 888-222-8045
ATMOS ENERGY (EMERGENCY).....1-866-322-8667
AT&T.....817-709-9529
TEXAS ONE CALL (CALL BEFORE YOU DIG!).....811
48 HOURS PRIOR TO CONSTRUCTION

BENCHMARKS:

CP#1 "X" CUT SET
N: 6943755.32
E: 2383171.31 ELEV: 584.69'

CP#2 MAG NAIL WITH
'TOPOGRAPHIC" WASHER SET
N: 6943551.28
E: 2383104.07 ELEV: 582.61'

CP#3 BOX CUT SET
N: 6943291.74
E: 2383174.16 ELEV: 583.15'

CP#4 BOX CUT SET
N: 6943041.08
E: 2383163.46 ELEV: 582.02'

CP#5 1/2" IRSC "TOPO CP"
N: 6942798.00
E: 2383107.14 ELEV: 581.45'

SCALE: 1" = 60'
60' 0' 30' 60' 120'

LEGEND
ROW LINE
ADJOINER LINE
OHL OVERHEAD ELECTRIC
ASPHALT PAVEMENT
CONCRETE PAVEMENT

TOPOGRAPHIC
LOYALTY INNOVATION LEGACY
481 WINSCOTT RD, STE. 200 • BENBROOK, TEXAS 76126
TELEPHONE: (817) 744-7512 • FAX (817) 744-7554
TEXAS FIRM REGISTRATION NO. 18409
TEXAS FIRM REGISTRATION NO. 10042504
WWW.TOPOGRAPHIC.COM

CORZINE DRIVE STORM DRAIN IMPROVEMENTS
DALWORTHINGTON GARDENS, TARRANT COUNTY, TX

GENERAL NOTES & SITE MAP

NO.	DATE	REVISION DESCRIPTION

PRELIMINARY. THIS DRAWING SHALL NOT BE RECORDED FOR ANY PURPOSE AND SHALL NOT BE USED OR VIEWED OR RELIED UPON AS FINAL CONSTRUCTION DRAWINGS.

PLANS PREPARED UNDER THE DIRECT SUPERVISION OF KYLON M. WILSON, P.E. TEXAS REGISTRATION NO. 77520

SHEET NO.
C1.1

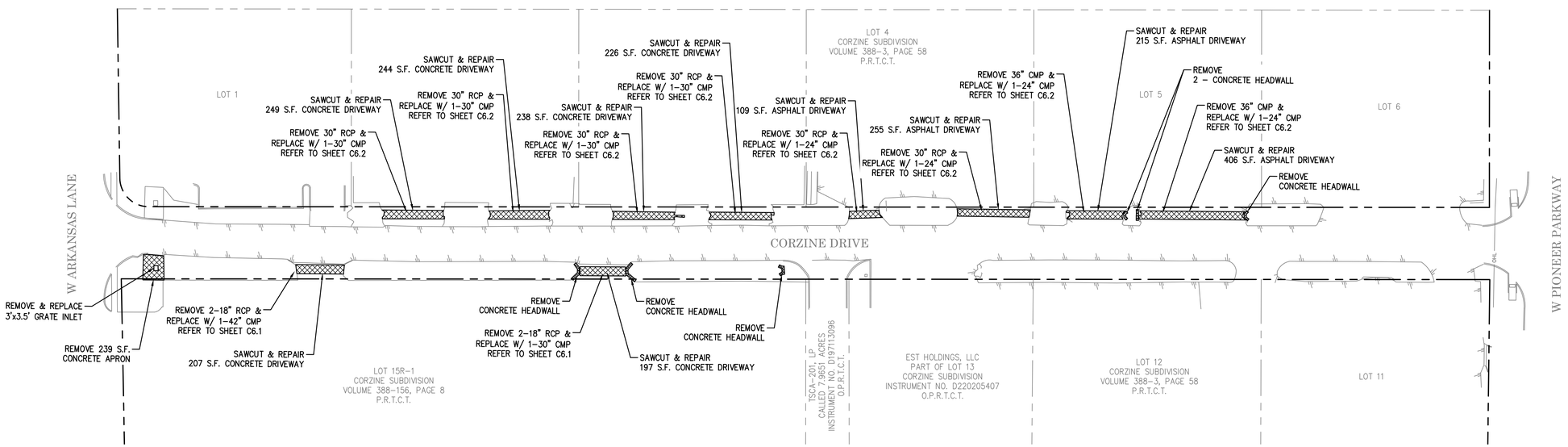

SCALE: 1" = 40'

40' 0' 20' 40' 80'

LEGEND

- ROW LINE
- ADJOINER LINE
- OHL — OVERHEAD ELECTRIC
- ASPHALT PAVEMENT
- CONCRETE PAVEMENT
- DEMOLITION AREA

TOPOGRAPHIC
LOYALTY INNOVATION LEGACY
481 WINSCOTT RD, STE. 200 • BENBROOK, TEXAS 76126
TELEPHONE: (817) 744-7512 • FAX (817) 744-7554
TEXAS FIRM REGISTRATION NO. 18409
TEXAS FIRM REGISTRATION NO. 10042504
WWW.TOPOGRAPHIC.COM

CORZINE DRIVE STORM DRAIN IMPROVEMENTS
DALWORTHINGTON GARDENS, TARRANT COUNTY, TX

DEMOLITION PLAN

NO.	DATE	REVISION DESCRIPTION

PRELIMINARY, THIS DRAWING SHALL NOT BE RECORDED FOR ANY PURPOSE AND SHALL NOT BE USED OR VIEWED OR RELIED UPON AS FINAL CONSTRUCTION DRAWINGS.

PLANS PREPARED UNDER THE DIRECT SUPERVISION OF KYLON M. WILSON, P.E. TEXAS REGISTRATION NO. 77520

SHEET NO.

C2.1

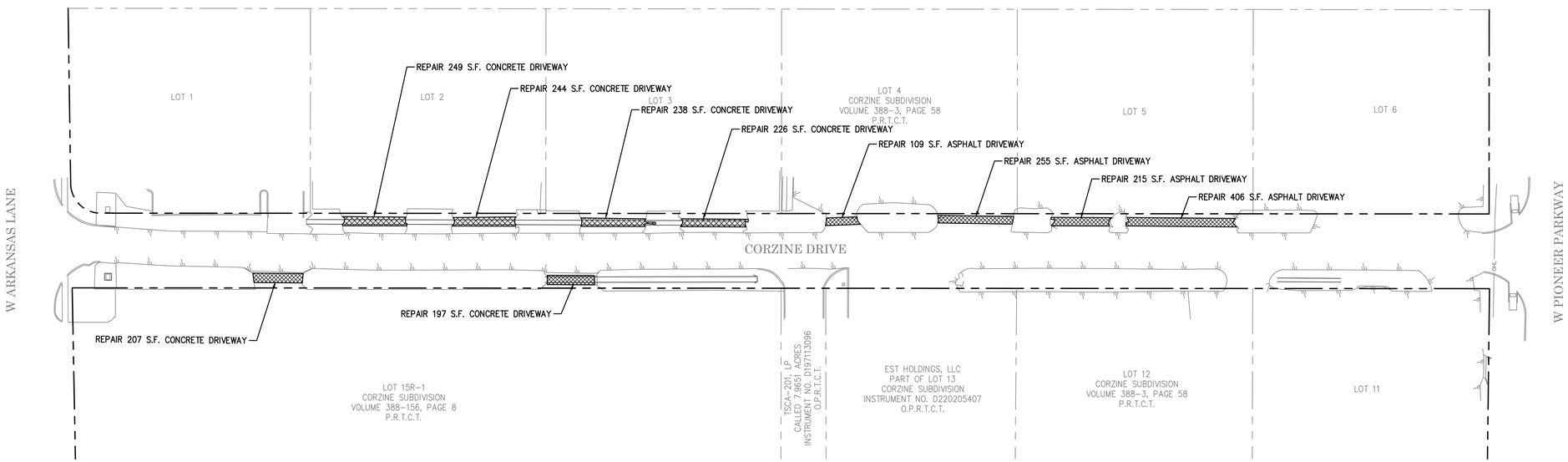

SCALE: 1" = 40'

40' 0' 20' 40' 80'

LEGEND

- ROW LINE
- ADJOINER LINE
- OHL — OVERHEAD ELECTRIC
- ASPHALT PAVEMENT
- CONCRETE PAVEMENT
- 2" HMAC

TOPOGRAPHIC
LOYALTY INNOVATION LEGACY
481 WINSCOTT RD, STE. 200 • BENBROOK, TEXAS 76126
TELEPHONE: (817) 744-7512 • FAX (817) 744-7554
TEXAS FIRM REGISTRATION NO. 18409
TEXAS FIRM REGISTRATION NO. 10042504
WWW.TOPOGRAPHIC.COM

CORZINE DRIVE STORM DRAIN IMPROVEMENTS
DALWORTHINGTON GARDENS, TARRANT COUNTY, TX

PAVING PLAN

NO.	DATE	REVISION DESCRIPTION

PRELIMINARY, THIS DRAWING SHALL NOT BE RECORDED FOR ANY PURPOSE AND SHALL NOT BE USED OR VIEWED OR RELIED UPON AS FINAL CONSTRUCTION DRAWINGS.

PLANS PREPARED UNDER THE DIRECT SUPERVISION OF KYLON M. WILSON, P.E.
TEXAS REGISTRATION NO. 77520

SHEET NO.

C3.1

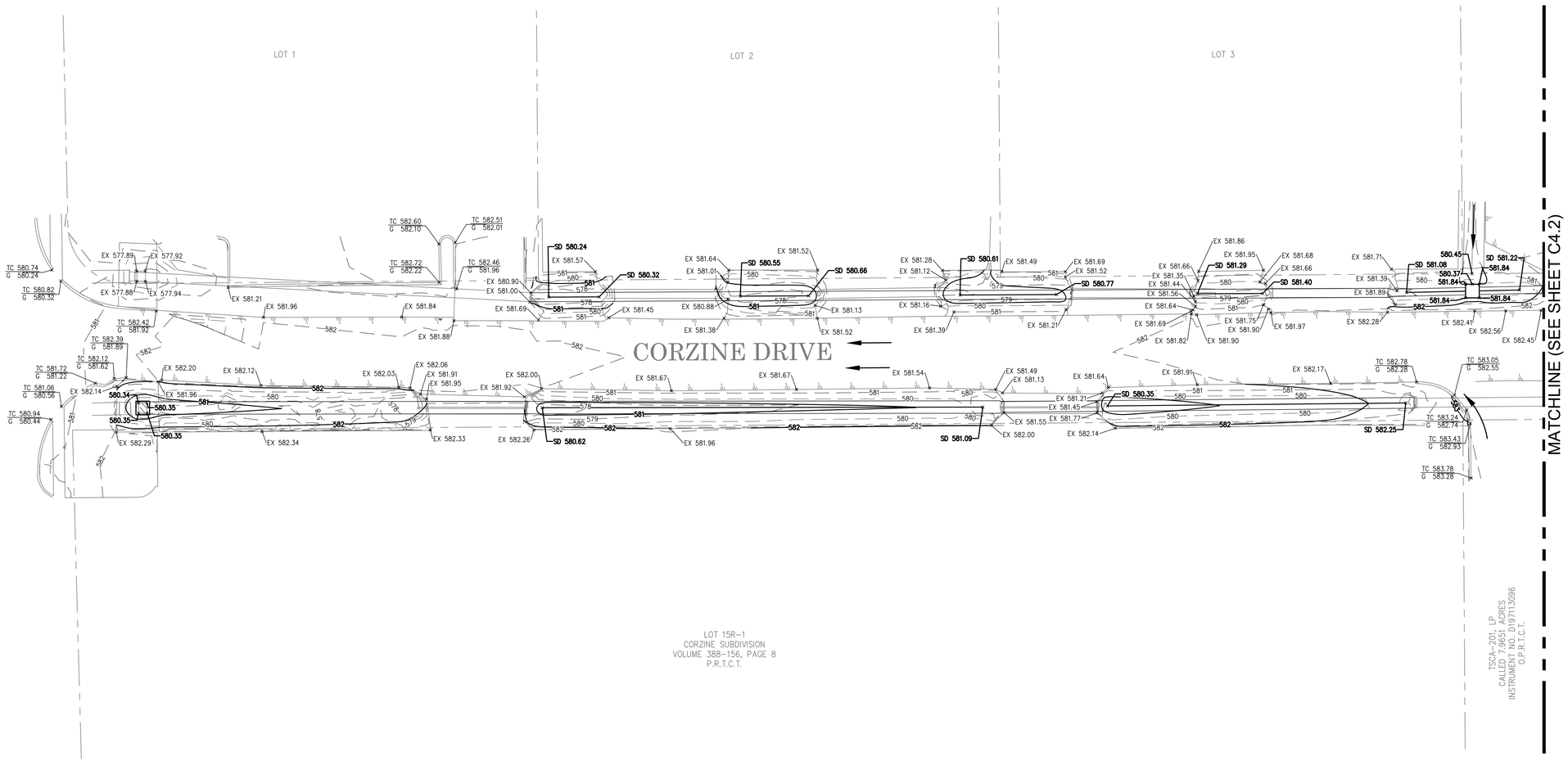

SCALE: 1" = 20'

20' 0' 10' 20' 40'

LEGEND

	ROW LINE
	ADJOINER LINE
OHL	OVERHEAD ELECTRIC
	ASPHALT PAVEMENT
	CONCRETE PAVEMENT
946	PROPOSED CONTOUR
946	EXISTING CONTOUR
× 932.88	PROPOSED SPOT ELEVATION
× EX 932.88	EXISTING SPOT ELEVATION
× TC 930.0 G 929.5	EXISTING TOP OF CURB AND GUTTER ELEVATION
× SD 932.88	PROPOSED SLOTTED DRAIN ELEVATION

TOPOGRAPHIC
LOYALTY INNOVATION LEGACY
481 WINSCOTT RD, STE. 200 • BENBROOK, TEXAS 76126
TELEPHONE: (817) 744-7512 • FAX (817) 744-7554
TEXAS FIRM REGISTRATION NO. 18409
TEXAS FIRM REGISTRATION NO. 10042504
WWW.TOPOGRAPHIC.COM

CORZINE DRIVE STORM DRAIN IMPROVEMENTS
DALWORTHINGTON GARDENS, TARRANT COUNTY, TX

GRADING PLAN

NO.	DATE	REVISION DESCRIPTION

PRELIMINARY, THIS DRAWING SHALL NOT BE RECORDED FOR ANY PURPOSE AND SHALL NOT BE USED OR VIEWED OR RELIED UPON AS FINAL CONSTRUCTION DRAWINGS.

PLANS PREPARED UNDER THE DIRECT SUPERVISION OF KYLON M. WILSON, P.E. TEXAS REGISTRATION NO. 77520

SHEET NO.

C4.1

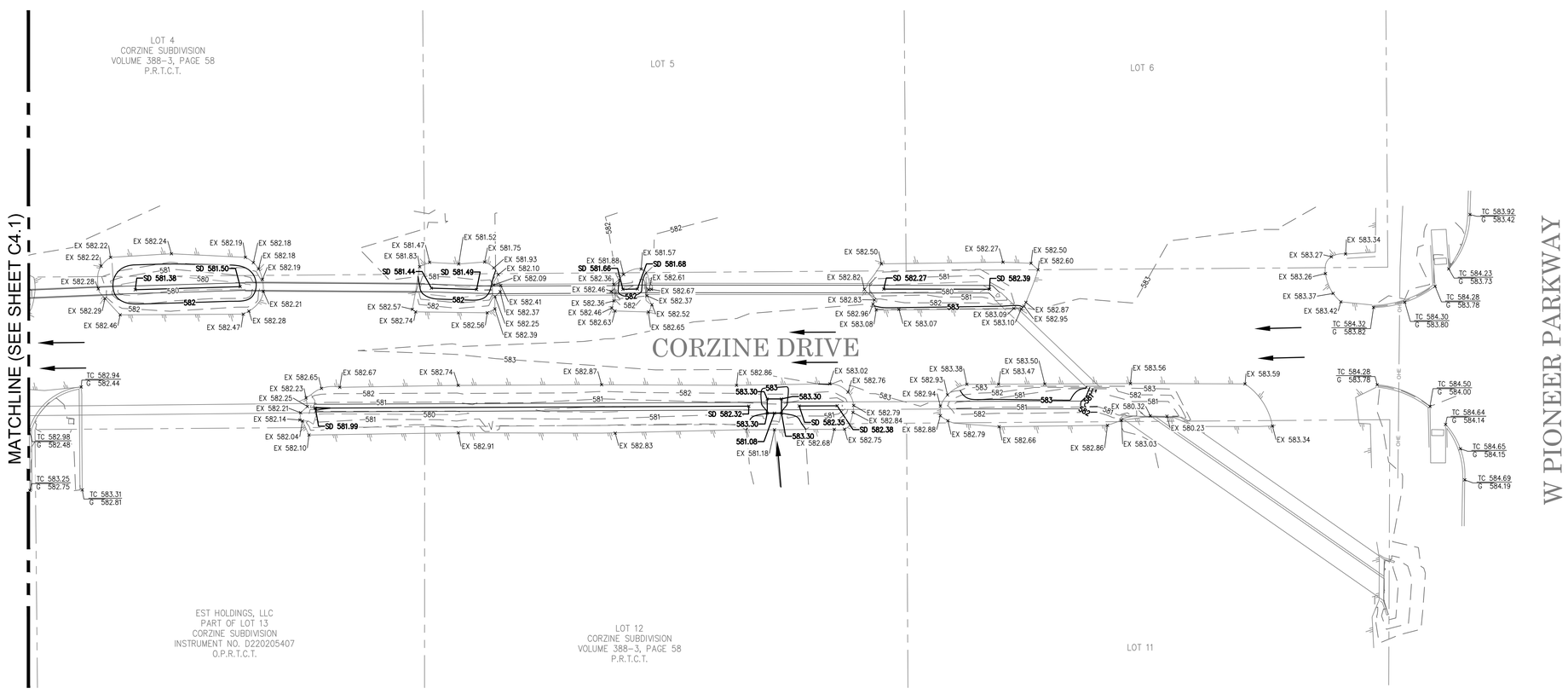

SCALE: 1" = 20'

20' 0' 10' 20' 40'

LEGEND

	ROW LINE
	ADJOINER LINE
OHL	OVERHEAD ELECTRIC
	ASPHALT PAVEMENT
	CONCRETE PAVEMENT
946	PROPOSED CONTOUR
946	EXISTING CONTOUR
● 932.88	PROPOSED SPOT ELEVATION
● EX 932.88	EXISTING SPOT ELEVATION
TC 930.0 G 929.5	EXISTING TOP OF CURB AND GUTTER ELEVATION
● SD 932.88	PROPOSED SLOTTED DRAIN ELEVATION

TOPOGRAPHIC
LOYALTY INNOVATION LEGACY
481 WINSCOTT RD, STE. 200 • BENBROOK, TEXAS 76126
TELEPHONE: (817) 744-7512 • FAX (817) 744-7554
TEXAS FIRM REGISTRATION NO. 18409
TEXAS FIRM REGISTRATION NO. 10042504
WWW.TOPOGRAPHIC.COM

CORZINE DRIVE STORM DRAIN IMPROVEMENTS
DALWORTHINGTON GARDENS, TARRANT COUNTY, TX

GRADING PLAN

NO.	DATE	REVISION DESCRIPTION

PRELIMINARY, THIS DRAWING SHALL NOT BE RECORDED FOR ANY PURPOSE AND SHALL NOT BE USED OR VIEWED OR RELIED UPON AS FINAL CONSTRUCTION DRAWINGS.

PLANS PREPARED UNDER THE DIRECT SUPERVISION OF KYLON M. WILSON, P.E.
TEXAS REGISTRATION NO. 77520

SHEET NO.

C4.2

SCALE: 1" = 40'

40' 0' 20' 40' 80'

LEGEND

- ROW LINE
- ADJOINER LINE
- OHL — OVERHEAD ELECTRIC
- ASPHALT PAVEMENT
- CONCRETE PAVEMENT
- 946 — PROPOSED CONTOUR
- 946 — EXISTING CONTOUR
- TIME OF CONCENTRATION PATH
- POST-DEVELOPED DRAINAGE AREA DIVIDE
- DA 1 0.20 AC — POST-DEVELOPED AREA ID (ACRES)
- POST-DEVELOPED FLOW DIRECTION

TOPOGRAPHIC
LOYALTY INNOVATION LEGACY
481 WINSCOTT RD, STE. 200 • BENBROOK, TEXAS 76126
TELEPHONE: (817) 744-7512 • FAX (817) 744-7554
TEXAS FIRM REGISTRATION NO. 18409
TEXAS FIRM REGISTRATION NO. 10042504
WWW.TOPOGRAPHIC.COM

CORZINE DRIVE STORM DRAIN IMPROVEMENTS
DALWORTHINGTON GARDENS, TARRANT COUNTY, TX

DRAINAGE AREA MAP

NO.	DATE	REVISION DESCRIPTION

PRELIMINARY, THIS DRAWING SHALL NOT BE RECORDED FOR ANY PURPOSE AND SHALL NOT BE USED OR VIEWED OR RELIED UPON AS FINAL CONSTRUCTION DRAWINGS.

PLANS PREPARED UNDER THE DIRECT SUPERVISION OF KYLON M. WILSON, P.E. TEXAS REGISTRATION NO. 77520

SHEET NO.

C5.1

S:\CIVIL\DALWORTHINGTON_GARDENS\CIP_2021\CIVIL\CORZINE\CIVIL\PLAN_SHEETS\CZ-DRAINAGE.DWG 5/23/2023 3:52 PM daniel.tirado

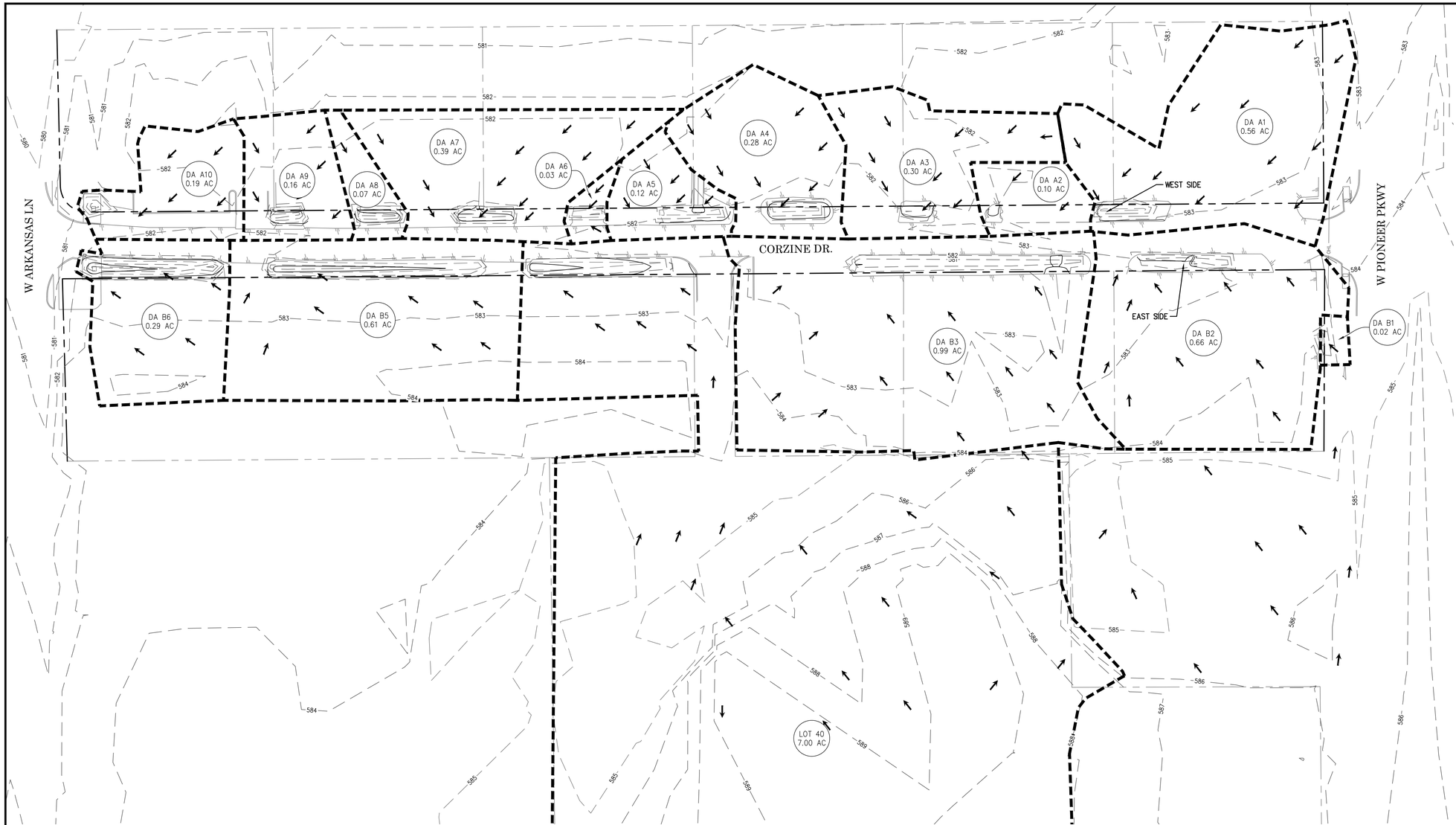

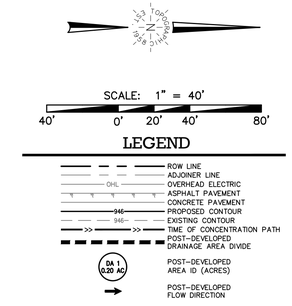

Area No.	Area (acres)	Runoff 'C'	Time of Conc. (min)	1-year Intensity (in/hr)	1-year Runoff (cfs)	2-year Intensity (in/hr)	2-year Runoff (cfs)	5-year Intensity (in/hr)	5-year Runoff (cfs)	10-year Intensity (in/hr)	10-year Runoff (cfs)	25-year Intensity (in/hr)	25-year Runoff (cfs)	50-year Intensity (in/hr)	50-year Runoff (cfs)	100-year Intensity (in/hr)	100-year Runoff (cfs)
WEST SIDE																	
DA A1	0.56	0.85	23.00	2.61	1.24	3.10	1.47	3.96	1.87	4.52	2.14	5.32	2.52	5.94	2.82	6.63	3.14
DA A2	0.10	0.87	13.00	3.60	0.31	4.20	0.37	5.20	0.45	5.90	0.51	6.88	0.60	7.66	0.67	8.46	0.74
DA A3	0.30	0.89	17.00	3.05	0.81	3.60	0.96	4.53	1.20	5.15	1.37	6.04	1.60	6.74	1.79	7.48	1.99
DA A4	0.28	0.88	16.00	3.17	0.78	3.73	0.92	4.67	1.15	5.32	1.31	6.22	1.53	6.94	1.71	7.70	1.89
DA A5	0.12	0.84	12.00	3.75	0.38	4.37	0.44	5.38	0.54	6.11	0.61	7.10	0.71	7.91	0.79	8.73	0.87
DA A6	0.03	0.76	10.00	3.99	0.09	4.63	0.11	5.66	0.13	6.42	0.15	7.45	0.17	8.28	0.19	9.12	0.21
DA A7	0.39	0.88	20.00	2.81	0.97	3.33	1.15	4.22	1.45	4.81	1.66	5.65	1.95	6.31	2.17	7.03	2.42
DA A8	0.07	0.83	13.00	3.58	0.21	4.19	0.24	5.18	0.30	5.89	0.34	6.86	0.40	7.64	0.44	8.44	0.49
DA A9	0.16	0.82	14.00	3.42	0.45	4.01	0.53	4.99	0.65	5.67	0.74	6.62	0.87	7.38	0.96	8.16	1.07
DA A10	0.19	0.84	17.00	3.08	0.49	3.63	0.58	4.56	0.73	5.20	0.83	6.09	0.97	6.79	1.08	7.54	1.20
WEST TOTAL	**2.20**				**5.72**		**6.75**		**8.48**		**9.66**		**11.31**		**12.63**		**14.02**
EAST SIDE																	
DA B1	0.02	0.30	27.00	2.34	0.01	2.80	0.02	3.59	0.02	4.11	0.02	4.85	0.03	5.43	0.03	6.07	0.04
DA B2	0.66	0.81	29.00	2.25	1.20	2.69	1.44	3.47	1.85	3.97	2.12	4.69	2.51	5.26	2.81	5.88	3.14
DA B3	0.99	0.87	25.00	2.46	2.12	2.93	2.53	3.75	3.24	4.28	3.70	5.05	4.37	5.65	4.89	6.31	5.46
DA B4	2.14	0.90	35.00	2.00	3.85	2.40	4.62	3.11	6.00	3.57	6.88	4.23	8.16	4.75	9.15	5.33	10.26
DA B5	0.61	0.86	24.00	2.55	1.34	3.03	1.59	3.87	2.03	4.41	2.32	5.20	2.74	5.82	3.06	6.49	3.41
DA B6	0.29	0.84	19.00	2.93	0.71	3.46	0.84	4.37	1.06	4.98	1.21	5.84	1.42	6.52	1.58	7.25	1.76
EAST TOTAL	**4.71**				**9.24**		**11.04**		**14.21**		**16.26**		**19.22**		**21.52**		**24.07**
GRAND TOTAL	**6.91**				**14.96**		**17.79**		**22.69**		**25.92**		**30.53**		**34.14**		**38.09**

*DA B1 DRAINS TO CREEK ON EAST SIDE BUT THEN SOME RUNOFF GOES TO WEST CREEK

TOPOGRAPHIC
LOYALTY INNOVATION LEGACY
481 WINSCOTT RD, STE. 200 • BENBROOK, TEXAS 76126
TELEPHONE: (817) 744-7512 • FAX (817) 744-7554
TEXAS FIRM REGISTRATION NO. 18409
TEXAS FIRM REGISTRATION NO. 10042504
WWW.TOPOGRAPHIC.COM

CORZINE DRIVE STORM DRAIN IMPROVEMENTS
DALWORTHINGTON GARDENS, TARRANT COUNTY, TX

DRAINAGE CALCULATIONS

NO.	DATE	REVISION DESCRIPTION

PRELIMINARY, THIS DRAWING SHALL NOT BE RECORDED FOR ANY PURPOSE AND SHALL NOT BE USED OR VIEWED OR RELIED UPON AS FINAL CONSTRUCTION DRAWINGS.

PLANS PREPARED UNDER THE DIRECT SUPERVISION OF KYLON M. WILSON, P.E. TEXAS REGISTRATION NO. 77520

SHEET NO.

C5.2

100-YEAR STORM DRAIN HYDRAULIC CALCULATIONS TABLE

FROM (DS)	TO DESIGN (US)	Pipe Length	Drainage Area Incremental No.	Drainage Area Incremental Area	Drainage Area Total Area	Runoff 'C'	Incr. cA	Total cA	Time of Concentration Inlet min.	Time of Concentration Travel min.	Time of Concentration Total min.	5-yr Intensity in/hr	100-yr Intensity in/hr	Q5 Runoff cfs	Q100 Runoff cfs	Inlet Bypass cfs	Q Pipe cfs	Pipe Size in.	n	Sf ft/ft	HGL D/S Elev.	HGL U/S Elev.	HEAD LOSS CALCULATIONS V1 (in) ft/sec	V2 (out) ft/sec	$V1^2/2g$ ft.	$V2^2/2g$ ft.	Kj ft.	$KjV1^2/2g$ ft.	Hk ft.	Design HGL Elev.	Invert Elev. FROM ft.	Invert Elev. TO ft.	T/C ELEV. ft.
1	2	3	4	5	6	7	8	9	10	11	12	13	14	15	16	17	18	19	20	21	22	23	24	25	26	27	28	29	30	31	32	33	34
A	WEST SIDE																																
8+17.85	8+62.74	44.89	DA B1, DA B2	0.68	0.68	0.55	0.37	0.37	28.00	1.69	29.69	3.41	5.79	1.28	2.17	0.00	2.17	30"	0.022	0.0001	582.20	582.20	0.00	0.44	0.00	0.00	0.50	0.00	0.10	582.30	579.63	579.92	582.27
8+14.87	8+17.85	2.98	N/A	0.00	0.68	0.00	0.00	0.37	0.00	0.07	29.69	3.41	5.79	1.28	2.17	0.00	2.17	24"	0.022	0.0003	582.10	582.10	0.44	0.69	0.00	0.01	0.50	0.00	0.10	582.20	579.62	579.63	582.50
7+75.19	8+14.87	39.68	DA A1	0.56	1.24	0.85	0.47	0.85	22.78	0.43	30.00	3.39	5.76	2.88	4.89	0.00	4.89	24"	0.022	0.0013	581.94	582.00	0.69	1.56	0.01	0.04	0.35	0.00	0.10	582.10	579.48	579.62	581.88
7+01.89	7+75.19	73.30	N/A	0.00	1.24	0.00	0.00	0.85	0.00	0.79	30.00	3.39	5.76	2.88	4.89	0.00	4.89	24"	0.022	0.0013	581.75	581.84	1.56	1.56	0.04	0.04	0.00	0.00	0.10	581.94	579.22	579.48	581.75
6+91.58	7+01.89	10.31	DA A2	0.10	1.34	0.87	0.09	0.94	12.87	0.10	30.00	3.39	5.76	3.17	5.39	0.00	5.39	24"	0.022	0.0016	581.63	581.65	1.56	1.71	0.04	0.05	0.00	0.00	0.10	581.75	579.18	579.22	581.47
6+51.13	6+91.58	40.45	N/A	0.00	1.34	0.00	0.00	0.94	0.00	0.39	30.00	3.39	5.76	3.17	5.39	0.00	5.39	24"	0.022	0.0016	581.46	581.53	1.71	1.71	0.05	0.05	0.00	0.00	0.10	581.63	579.03	579.18	582.18
6+28.04	6+51.13	23.09	DA A3	0.30	1.64	0.89	0.27	1.20	17.48	0.17	30.00	3.39	5.76	4.07	6.92	0.00	6.92	24"	0.022	0.0027	581.30	581.36	1.71	2.20	0.05	0.08	0.00	0.00	0.10	581.46	578.95	579.03	582.22
5+70.38	6+28.04	57.66	N/A	0.00	1.64	0.00	0.00	1.20	0.00	0.44	30.00	3.39	5.76	4.07	6.92	0.00	6.92	24"	0.022	0.0027	581.05	581.20	2.20	2.20	0.08	0.08	0.00	0.00	0.10	581.30	578.74	578.95	582.45
5+30.01	5+70.38	40.37	DA A4	0.28	1.92	0.88	0.25	1.45	16.35	0.25	30.00	3.39	5.76	4.91	8.34	0.00	8.34	24"	0.022	0.0039	580.79	580.95	2.20	2.65	0.08	0.11	0.00	0.00	0.10	581.05	578.60	578.74	581.40
4+95.93	5+30.01	34.08	N/A	0.00	1.92	0.00	0.00	1.45	0.00	0.21	30.00	3.39	5.76	4.91	8.34	0.00	8.34	24"	0.022	0.0039	580.56	580.69	2.65	2.65	0.11	0.11	0.00	0.00	0.10	580.79	578.48	578.60	581.21
4+46.55	4+95.93	49.38	DA A5	0.12	2.04	0.84	0.10	1.55	11.84	0.29	30.00	3.39	5.76	5.25	8.91	0.00	8.91	24"	0.022	0.0044	580.24	580.46	2.65	2.84	0.11	0.13	0.00	0.00	0.10	580.56	578.30	578.48	581.16
1+53.39	4+46.55	293.16	DA A6, DA A7, DA A8, DA A9	0.65	2.69	0.82	0.53	2.08	14.42	2.00	30.00	3.39	5.76	7.06	11.99	0.00	11.99	30"	0.022	0.0024	579.42	580.14	2.84	2.44	0.13	0.09	0.10	0.01	0.10	580.24	576.92	578.30	581.24
0+16.20	1+53.39	137.19	N/A	0.00	2.69	0.00	0.00	2.08	0.00	0.94	30.00	3.39	5.76	7.06	11.99	0.00	11.99	30"	0.022	0.0024	576.04	576.37	2.44	2.44	0.09	0.09	0.00	0.00	0.10	576.47	572.53	576.92	580.82
0+03.20	0+16.20	13.00	DA A10	0.19	2.88	0.84	0.16	2.24	17.19	0.16	30.00	3.39	5.76	7.60	12.91	0.00	12.91	42"	0.022	0.0005	575.93		2.44	1.34	0.09	0.03	0.23	0.02	0.10	576.04	572.43	572.53	580.82
B	ESAT SIDE																																
8+02.82	8+45.19	42.37	DA B1, DA B2	0.68	0.68	0.55	0.37	0.37	28.00	1.01	29.01	3.46	5.87	1.29	2.19	0.00	2.19	24"	0.022	0.0003	581.33	581.34	0.00	0.70	0.00	0.01	0.50	0.00	0.10	581.44	580.30	580.38	583.02
7+65.38	8+02.82	37.44	N/A	0.00	0.00	0.00	0.00	0.37	0.00	0.89	29.01	3.46	5.87	1.29	2.19	0.00	2.19	24"	0.022	0.0003	581.22	581.23	0.70	0.70	0.01	0.01	0.50	0.00	0.10	581.33	579.91	580.30	582.23
5+92.25	7+65.38	173.13	DA B3	0.99	0.99	0.87	0.87	1.24	25.19	1.27	30.00	3.39	5.76	4.20	7.14	0.00	7.14	24"	0.022	0.0029	580.62	581.12	0.70	2.27	0.01	0.08	0.50	0.00	0.10	581.22	579.51	579.91	582.78
4+53.80	5+92.25	138.45	N/A	0.00	0.99	0.00	0.00	1.24	0.00	1.59	30.00	3.39	5.76	4.20	7.14	0.00	7.14	30"	0.022	0.0009	580.40	580.52	2.27	1.45	0.08	0.03	0.10	0.01	0.10	580.62	578.56	579.51	581.64
3+12.65	4+53.80	141.15	DA B4	7.00	7.99	0.90	6.30	7.54	34.67	0.38	30.00	3.39	5.76	25.58	43.44	0.00	43.44	36"	0.022	0.0121	578.11	579.82	1.45	6.15	0.03	0.59	0.23	0.01	0.58	580.40	575.73	578.56	581.49
1+56.38	3+12.65	156.27	DA B5	0.61	8.60	0.86	0.53	8.07	23.78	0.54	30.00	3.39	5.76	27.36	46.47	0.00	46.47	42"	0.022	0.0061	577.05	578.01	6.15	4.83	0.59	0.36	0.00	0.00	0.10	578.11	574.02	575.73	581.92
0+21.35	1+56.38	135.03	N/A	0.00	8.60	0.00	0.00	8.07	0.00	0.47	30.00	3.39	5.76	27.36	46.47	0.00	46.47	42"	0.022	0.0061	576.13	576.95	4.83	4.83	0.36	0.36	0.00	0.00	0.10	577.05	572.53	574.02	581.96
0+02.70	0+17.67	14.97	DA B6	0.29	8.89	0.84	0.24	8.31	18.79	0.05	30.00	3.39	5.76	28.19	47.88	0.00	47.88	42"	0.022	0.0065	575.93	576.03	4.83	4.98	0.36	0.38	0.00	0.00	0.10	576.13	572.43	572.53	581.96

SLOTTED DRAIN CALCULATIONS

West Side

INLET ID.	TOTAL FLOW INTO INLET Q (cfs)	LONGITUDINAL GUTTER SLOPE S (ft/ft)	TRANSVERSE SLOPE Sx (ft/ft)	MANNING'S ROUGHNESS COEFFICIENT n	TRANSVERSE SLOPE RECIPROCAL Z (ft/ft)	SLOT LENGTH REQUIRED FOR TOTAL INTERCEPTION Lr (ft)	SELECTED LENGTH OF SLOT Ls (ft)	Ls/Lr	TOTAL GUTTER FLOW AT INLET Q (cfs)	INTERCEPTED FLOW AT INLET Qi (cfs)	BYPASS FLOW Qb (cfs)	EFFICIENCY Qi/Q
DA A1	3.14	0.0010	0.08	0.01	12.50	6.54	34.71	5.31	3.14	3.14	0.00	1.00
DA A2	0.74	0.0036	0.07	0.01	14.29	5.74	10.00	1.74	0.74	0.74	0.00	1.00
DA A3	1.99	0.0001	0.10	0.01	10.00	2.25	14.81	6.60	1.99	1.99	0.00	1.00
DA A4	1.89	0.0036	0.07	0.01	14.29	8.64	34.43	3.98	1.89	1.89	0.00	1.00
DA A5	0.87	0.0036	0.07	0.01	14.29	6.19	27.59	4.46	0.87	0.87	0.00	1.00
DA A6	0.21	0.0047	0.07	0.01	14.29	3.64	22.28	6.12	0.21	0.21	0.00	1.00
DA A7	2.42	0.0047	0.11	0.01	9.09	7.34	32.89	4.48	2.42	2.42	0.00	1.00
DA A8	0.49	0.0047	0.12	0.01	8.33	3.48	23.32	6.71	0.49	0.49	0.00	1.00
DA A9	1.07	0.0047	0.16	0.01	6.25	3.89	17.22	4.43	1.07	1.07	0.00	1.00

East Side

INLET ID.	TOTAL FLOW INTO INLET Q (cfs)	LONGITUDINAL GUTTER SLOPE S (ft/ft)	TRANSVERSE SLOPE Sx (ft/ft)	MANNING'S ROUGHNESS COEFFICIENT n	TRANSVERSE SLOPE RECIPROCAL Z (ft/ft)	SLOT LENGTH REQUIRED FOR TOTAL INTERCEPTION Lr (ft)	SELECTED LENGTH OF SLOT Ls (ft)	Ls/Lr	TOTAL GUTTER FLOW AT INLET Q (cfs)	INTERCEPTED FLOW AT INLET Qi (cfs)	BYPASS FLOW Qb (cfs)	EFFICIENCY Qi/Q
DA B3	8.64	0.0023	0.08	0.01	12.50	12.98	102.46	7.89	8.64	8.64	0.00	1.00
DA B4	10.26	0.0100	0.08	0.01	12.50	21.87	101.84	4.66	10.26	10.26	0.00	1.00
DA B5	3.41	0.0040	0.12	0.01	8.33	7.57	153.30	20.24	3.41	3.41	0.00	1.00

TOPOGRAPHIC
LOYALTY INNOVATION LEGACY
481 WINSCOTT RD, STE. 200 • BENBROOK, TEXAS 76126
TELEPHONE: (817) 744-7512 • FAX (817) 744-7554
TEXAS FIRM REGISTRATION NO. 18409
TEXAS FIRM REGISTRATION NO. 10042504
WWW.TOPOGRAPHIC.COM

CORZINE DRIVE STORM DRAIN IMPROVEMENTS
DALWORTHINGTON GARDENS, TARRANT COUNTY, TX

HYDRAULIC CALCULATIONS

NO.	DATE	REVISION DESCRIPTION

PRELIMINARY, THIS DRAWING SHALL NOT BE RECORDED FOR ANY PURPOSE AND SHALL NOT BE USED OR VIEWED OR RELIED UPON AS FINAL CONSTRUCTION DRAWINGS.

PLANS PREPARED UNDER THE DIRECT SUPERVISION OF KYLON M. WILSON, P.E. TEXAS REGISTRATION NO. 77520

SHEET NO.

C5.3

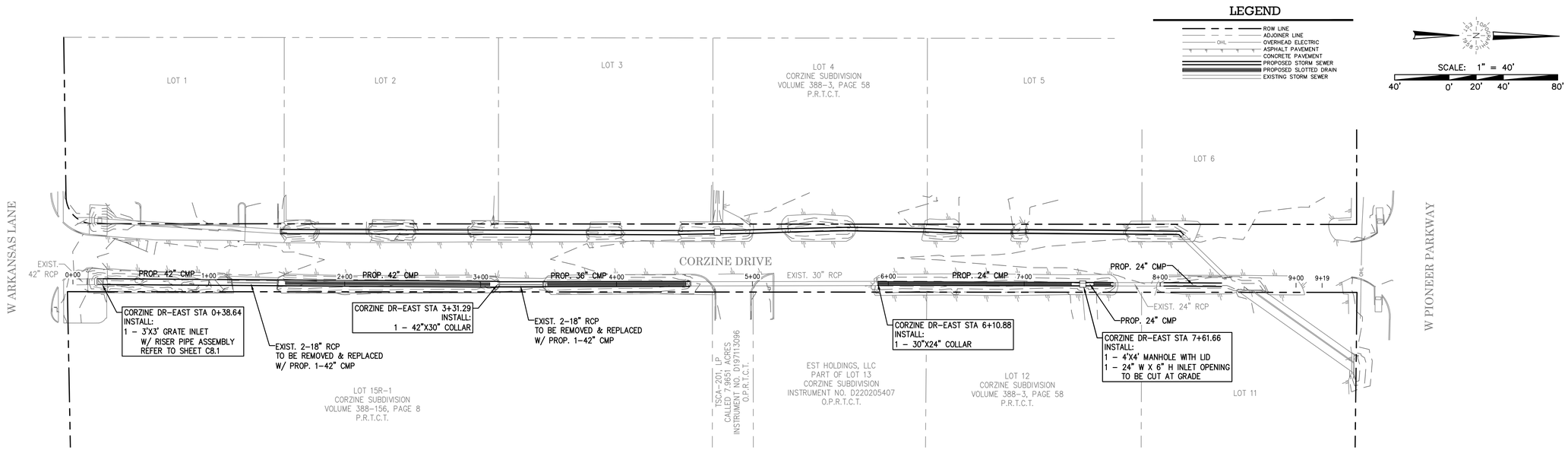

CORZINE DRIVE - EAST

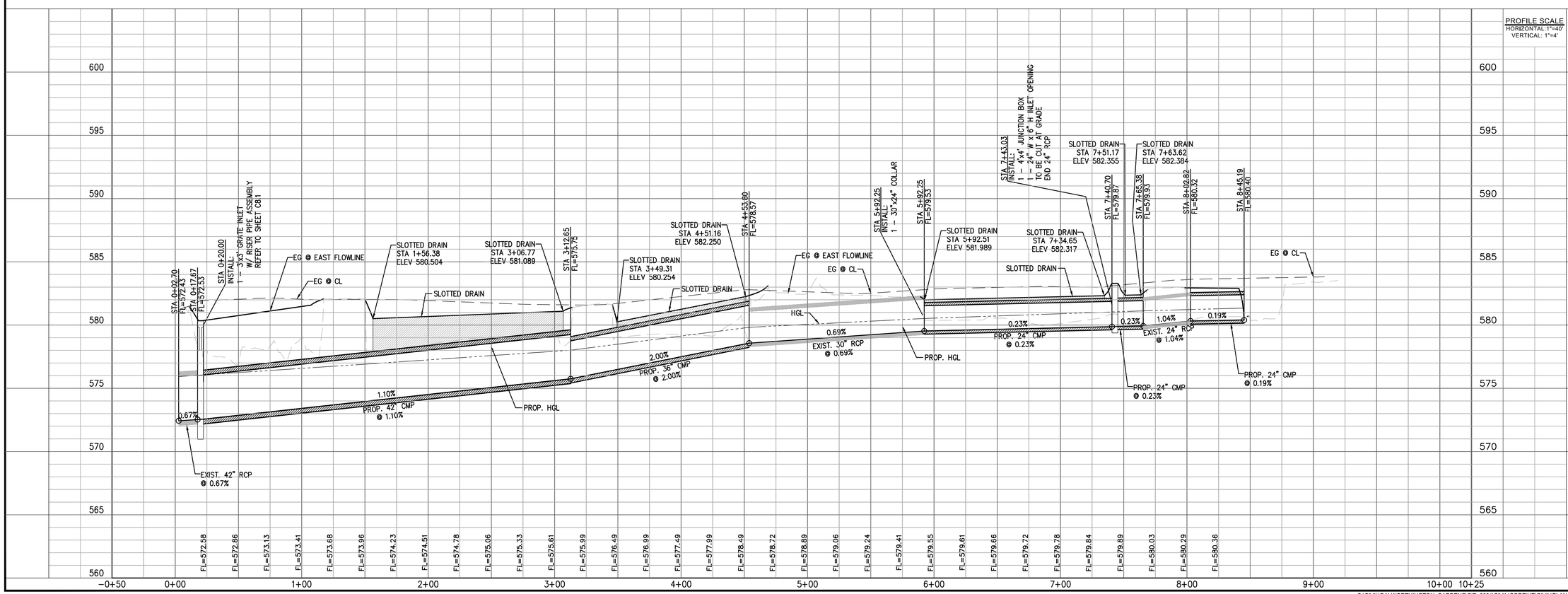

TOPOGRAPHIC
LOYALTY INNOVATION LEGACY
481 WINSCOTT RD, STE. 200 • BENBROOK, TEXAS 76126
TELEPHONE: (817) 744-7512 • FAX (817) 744-7554
TEXAS FIRM REGISTRATION NO. 18409
TEXAS FIRM REGISTRATION NO. 10042504
WWW.TOPOGRAPHIC.COM

CORZINE DRIVE STORM DRAIN IMPROVEMENTS
DALWORTHINGTON GARDENS, TARRANT COUNTY, TX

STORM PLAN AND PROFILE

NO.	DATE	REVISION DESCRIPTION

PRELIMINARY, THIS DRAWING SHALL NOT BE RECORDED FOR ANY PURPOSE AND SHALL NOT BE USED OR VIEWED OR RELIED UPON AS FINAL CONSTRUCTION DRAWINGS.

PLANS PREPARED UNDER THE DIRECT SUPERVISION OF KYLON M. WILSON, P.E. TEXAS REGISTRATION NO. 77520

SHEET NO.

C6.1

S:\CIVIL\DALWORTHINGTON_GARDENS\CIP_2021\CIVIL\CORZINE\CIVIL\PLAN_SHEETS\CZ-STORM.DWG 5/23/2023 3:53 PM daniel.tirado

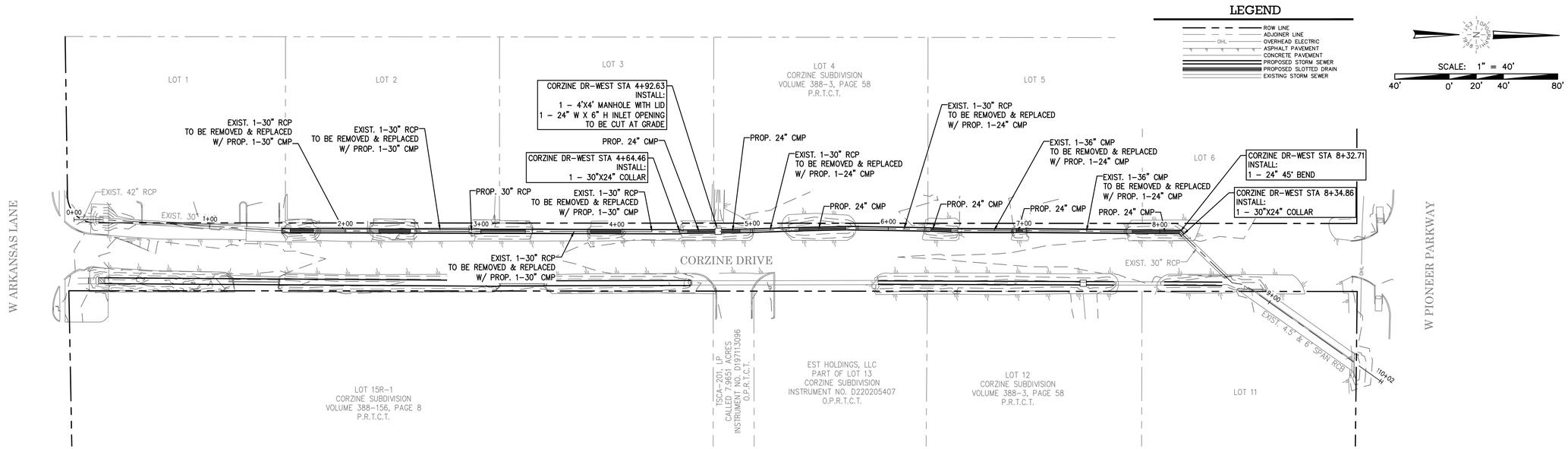

CORZINE DRIVE - WEST

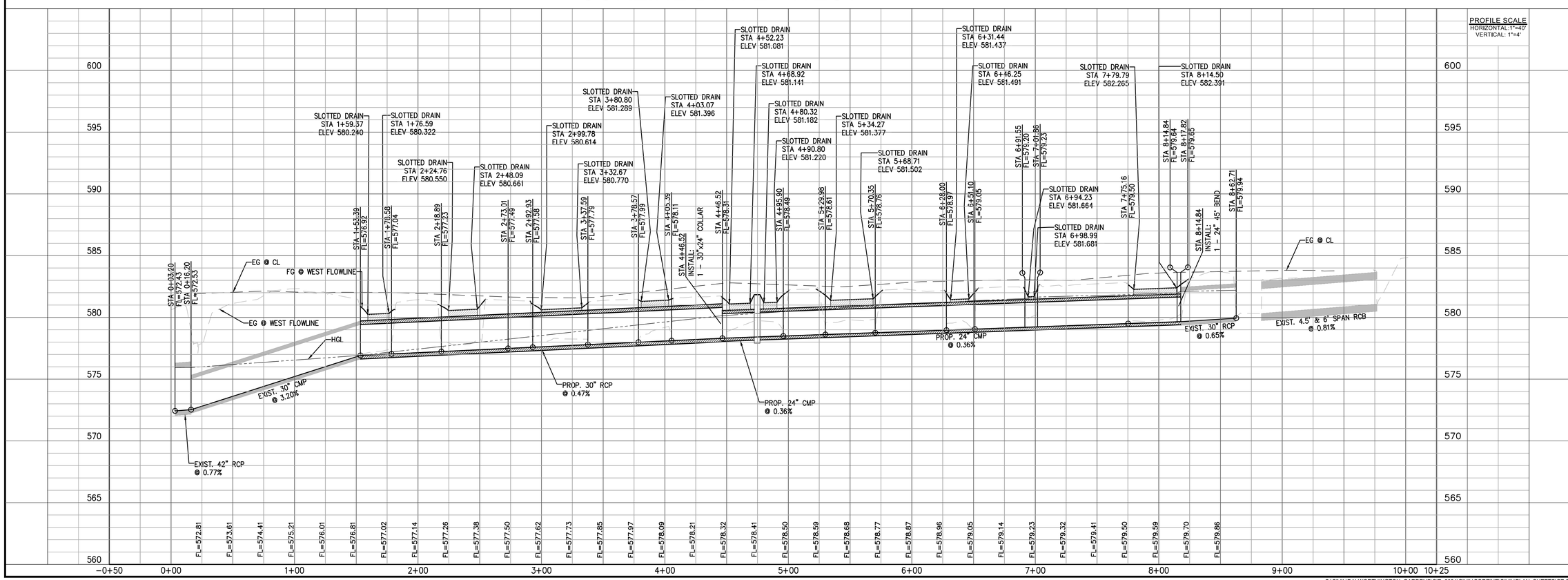

TOPOGRAPHIC
LOYALTY INNOVATION LEGACY
481 WINSCOTT RD, STE. 200 • BENBROOK, TEXAS 76126
TELEPHONE: (817) 744-7512 • FAX (817) 744-7554
TEXAS FIRM REGISTRATION NO. 18409
TEXAS FIRM REGISTRATION NO. 10042504
WWW.TOPOGRAPHIC.COM

CORZINE DRIVE STORM DRAIN IMPROVEMENTS
DALWORTHINGTON GARDENS, TARRANT COUNTY, TX

STORM PLAN AND PROFILE

NO.	DATE	REVISION DESCRIPTION

PRELIMINARY, THIS DRAWING SHALL NOT BE RECORDED FOR ANY PURPOSE AND SHALL NOT BE USED OR VIEWED OR RELIED UPON AS FINAL CONSTRUCTION DRAWINGS.

PLANS PREPARED UNDER THE DIRECT SUPERVISION OF KYLON M. WILSON, P.E.
TEXAS REGISTRATION NO. 77520

SHEET NO.
C6.2

S:\CIVIL\DALWORTHINGTON_GARDENS\CIP_2021\CIVIL\CORZINE\CIVIL\PLAN_SHEETS\CZ-STORM.DWG 5/23/2023 3:53 PM daniel.tirado

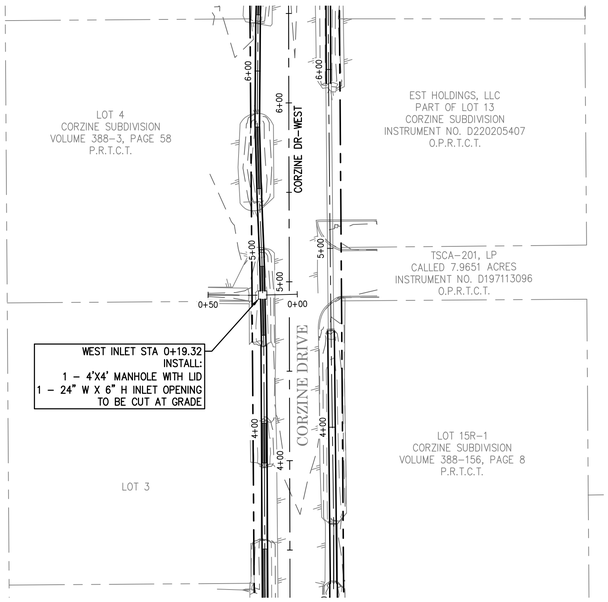

WEST INLET

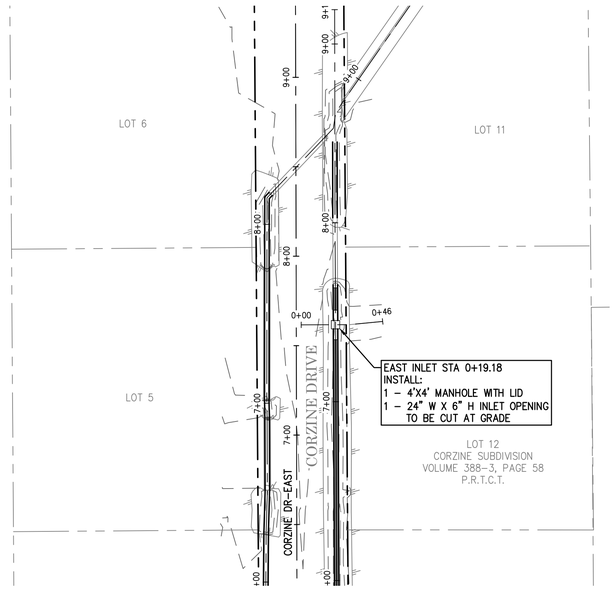

EAST INLET

LEGEND

- ROW LINE
- ADJOINER LINE
- ASPHALT PAVEMENT
- CONCRETE PAVEMENT
- PROPOSED STORM SEWER
- PROPOSED SLOTTED DRAIN
- EXISTING STORM SEWER

SCALE: 1" = 40'

40' 0' 20' 40' 80'

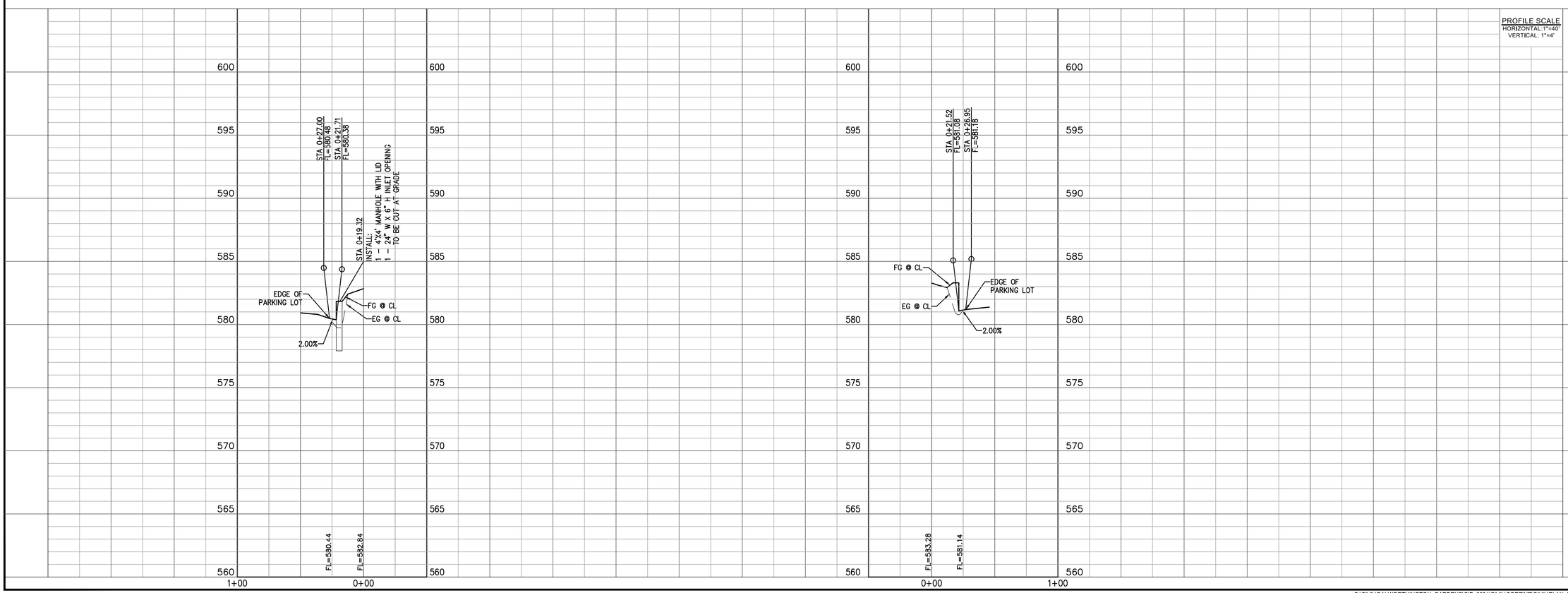

TOPOGRAPHIC
LOYALTY INNOVATION LEGACY
481 WINSCOTT RD, STE. 200 • BENBROOK, TEXAS 76126
TELEPHONE: (817) 744-7512 • FAX (817) 744-7554
TEXAS FIRM REGISTRATION NO. 18409
TEXAS FIRM REGISTRATION NO. 10042504
WWW.TOPOGRAPHIC.COM

CORZINE DRIVE STORM DRAIN IMPROVEMENTS
DALWORTHINGTON GARDENS, TARRANT COUNTY, TX

STORM PLAN AND PROFILE

NO.	DATE	REVISION DESCRIPTION

PRELIMINARY, THIS DRAWING SHALL NOT BE RECORDED FOR ANY PURPOSE AND SHALL NOT BE USED OR VIEWED OR RELIED UPON AS FINAL CONSTRUCTION DRAWINGS.

PLANS PREPARED UNDER THE DIRECT SUPERVISION OF KYLON M. WILSON, P.E. TEXAS REGISTRATION NO. 77520

SHEET NO.

C6.3

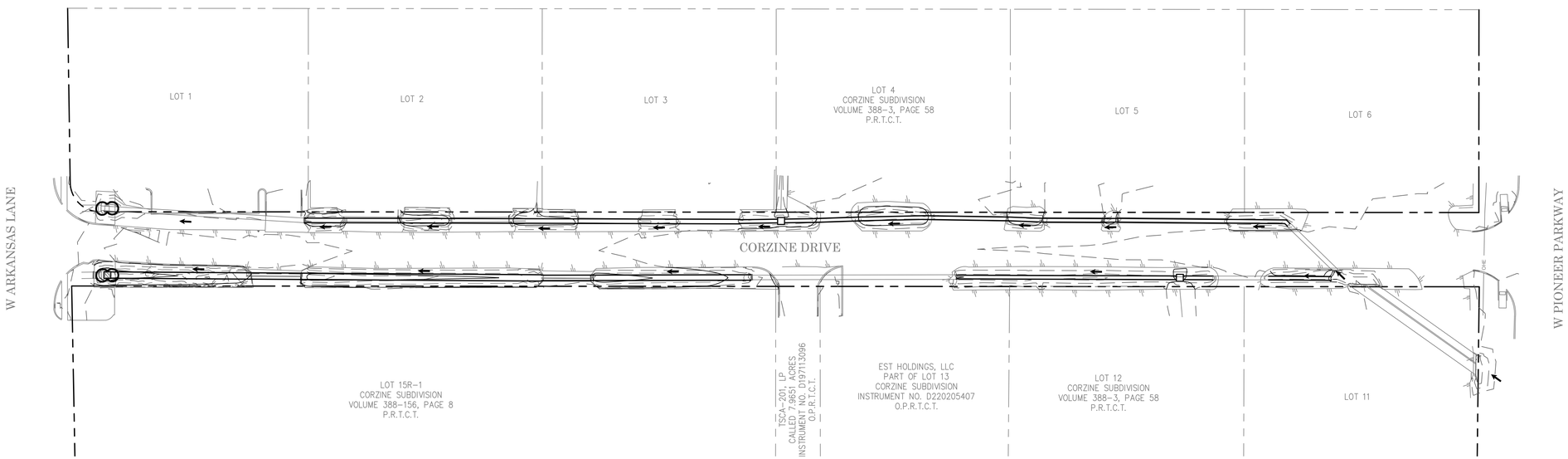

SCALE: 1" = 40'

40' 0' 20' 40' 80'

LEGEND

- ROW LINE
- ADJOINER LINE
- OHL — OVERHEAD ELECTRIC
- ASPHALT PAVEMENT
- CONCRETE PAVEMENT
- DRAINAGE FLOW DIRECTION
- INLET PROTECTION

TOPOGRAPHIC
LOYALTY INNOVATION LEGACY
481 WINSCOTT RD, STE. 200 • BENBROOK, TEXAS 76126
TELEPHONE: (817) 744-7512 • FAX (817) 744-7554
TEXAS FIRM REGISTRATION NO. 18409
TEXAS FIRM REGISTRATION NO. 10042504
WWW.TOPOGRAPHIC.COM

CORZINE DRIVE STORM DRAIN IMPROVEMENTS
DALWORTHINGTON GARDENS, TARRANT COUNTY, TX

EROSION CONTROL PLAN

NO.	DATE	REVISION DESCRIPTION

PRELIMINARY, THIS DRAWING SHALL NOT BE RECORDED FOR ANY PURPOSE AND SHALL NOT BE USED OR VIEWED OR RELIED UPON AS FINAL CONSTRUCTION DRAWINGS.

PLANS PREPARED UNDER THE DIRECT SUPERVISION OF KYLON M. WILSON, P.E.
TEXAS REGISTRATION NO. 77520

SHEET NO.

C7.1

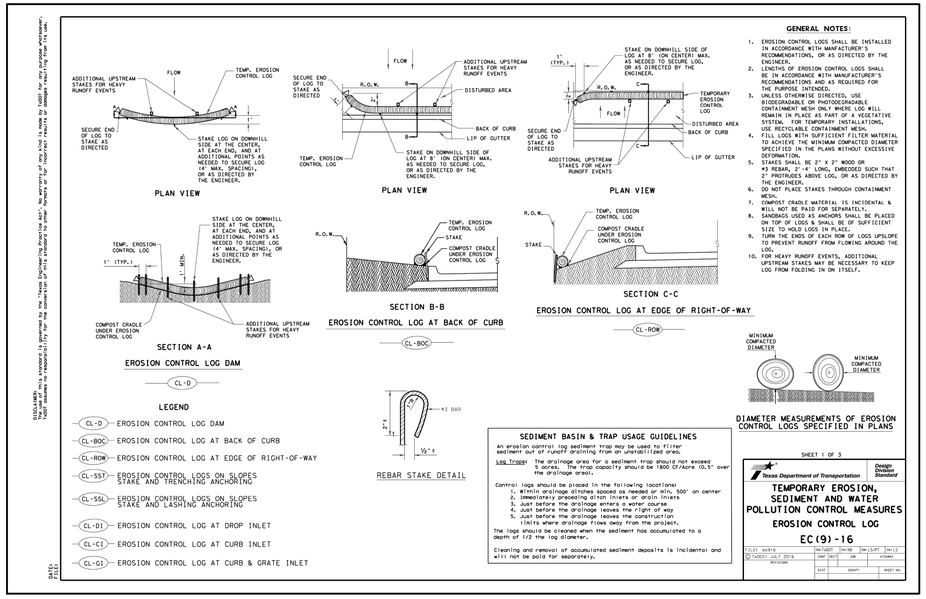

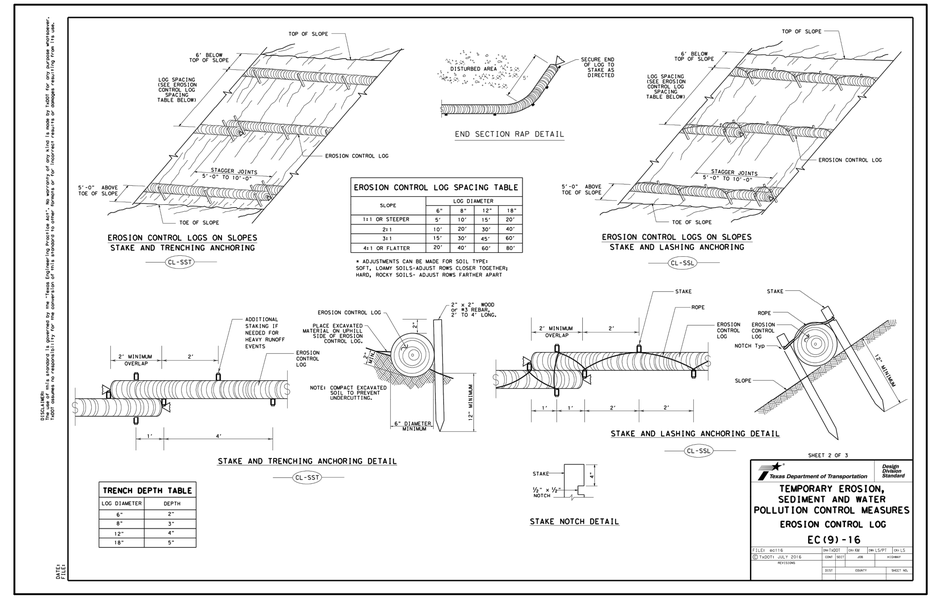

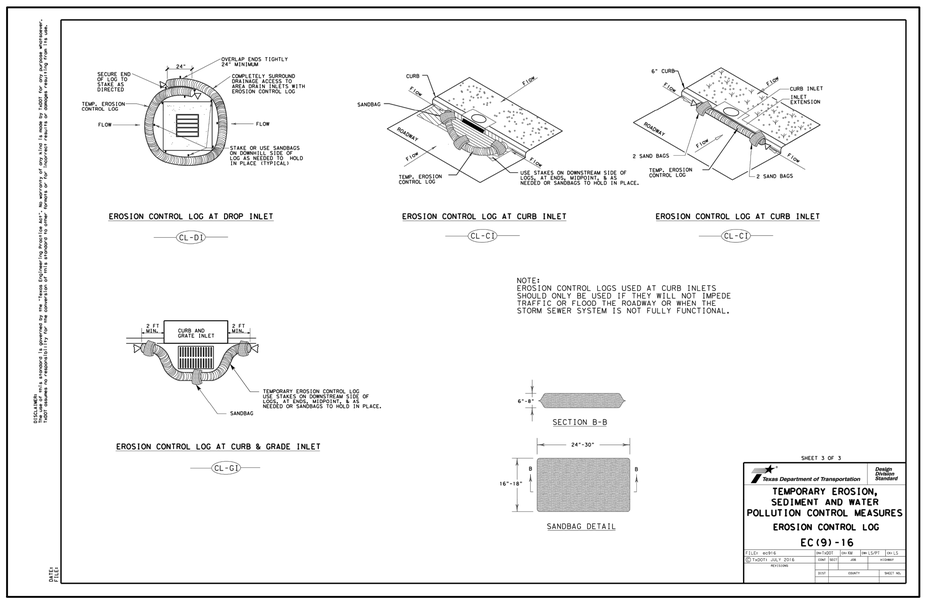

TOPOGRAPHIC
LOYALTY INNOVATION LEGACY
481 WINSCOTT RD, STE. 200 • BENBROOK, TEXAS 76126
TELEPHONE: (817) 744-7512 • FAX (817) 744-7554
TEXAS FIRM REGISTRATION NO. 18409
TEXAS FIRM REGISTRATION NO. 10042504
WWW.TOPOGRAPHIC.COM

CORZINE DRIVE STORM DRAIN IMPROVEMENTS
DALWORTHINGTON GARDENS, TARRANT COUNTY, TX

EROSION CONTROL DETAILS

NO.	DATE	REVISION DESCRIPTION

PRELIMINARY, THIS DRAWING SHALL NOT BE RECORDED FOR ANY PURPOSE AND SHALL NOT BE USED OR VIEWED OR RELIED UPON AS FINAL CONSTRUCTION DRAWINGS.

PLANS PREPARED UNDER THE DIRECT SUPERVISION OF KYLON M. WILSON, P.E. TEXAS REGISTRATION NO. 77520

SHEET NO.

C7.2

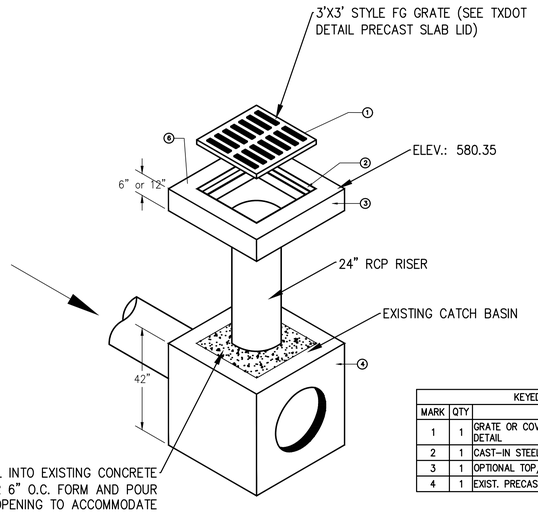

ISOMETRIC

KEYED NOTES		
MARK	QTY	DESCRIPTION
1	1	GRATE OR COVER AS REQUESTED, SEE DETAIL
2	1	CAST-IN STEEL FRAME
3	1	OPTIONAL TOP/EXTENSION 6" TO 18"
4	1	EXIST. PRECAST CONCRETE BASIN SECTION

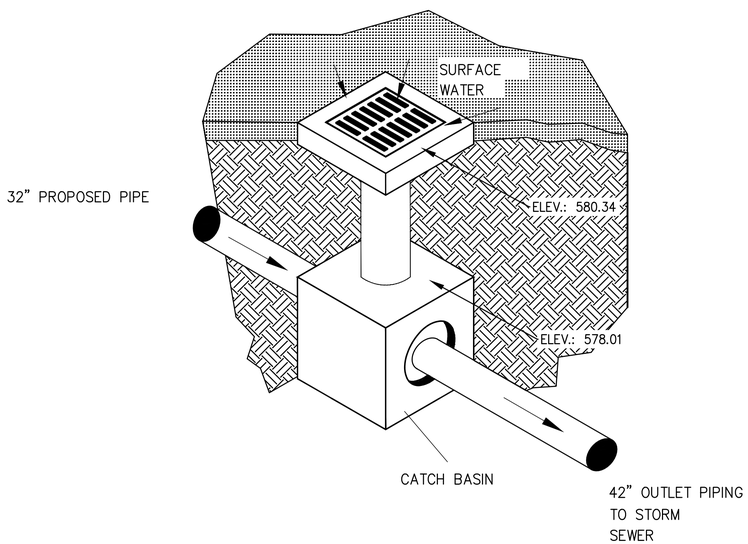

N.T.S.

SPECIFICATIONS

CONCRETE : CLASS H CONCRETE WITH OF DESIGN STRENGTH OF 5000 PSI AT 28 DAYS. UNIT IS OF MONOLITHIC CONSTRUCTION AT FLOOR AND FIRST STAGE OF WALL WITH SECTIONAL RISER TO REQUIRED DEPTH.

REINFORCEMENT: GRADE 60 REINFORCED. STEEL REBAR CONFORMING TO ASTM A615 ON REQUIRED CENTERS OR EQUAL.

C.I. CASTINGS: CAST IRON FRAMES AND GRATES ARE MANUFACTURED OF GREY CAST IRON CONFORMING TO ASTM A48-76 CLASS 30.

DISCLAIMER: The use of this standard is governed by the "Texas Engineering Practice Act". No warranty of any kind is assumed by TxDOT for any purpose whatsoever. TxDOT shall not be liable for the conversion of this standards to other formats or for incorrect results or damages resulting from its use.

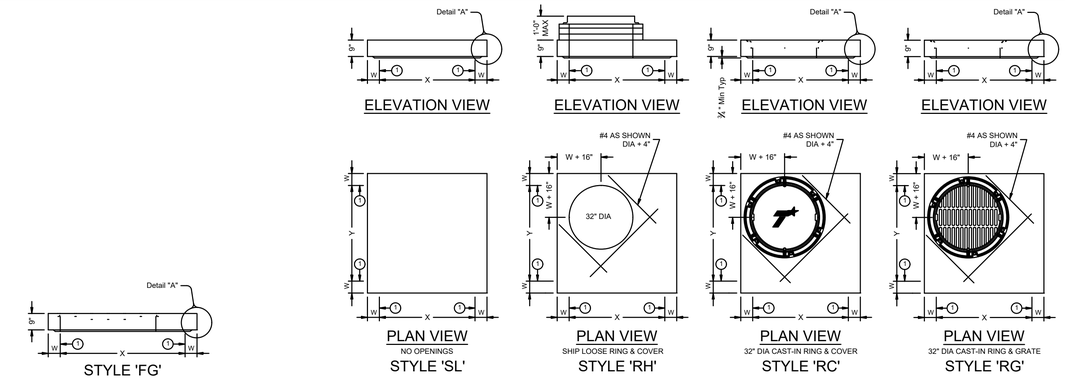

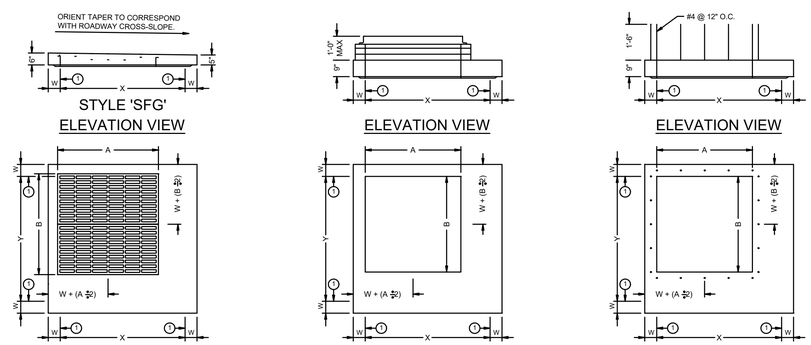

1 Matches inside face of wall of precast base or riser below inlet.

N.T.S.

HL93 LOADING SHEET 1 OF 2

Texas Department of Transportation — Bridge Division Standard

PRECAST SLAB LID

PSL

FILE: prestd5x2Ledge	DN: TxDOT	CK: TxDOT	DW: TxDOT	CK: TxDOT
©TxDOT February 2020	CONT	SECT	JOB	HIGHWAY
REVISIONS	DIST		COUNTY	SHEET NO.

DATE:
FILE:

Style	Size (X x Y)	W (2)	A x B (nominal)	Short Span Reinf Steel Area	Long Span Reinf Steel Area
SL	3'x3'	6"	n/a	0.37 in2/ft	0.37 in /ft
RH,RC,RG,SH,S1,FG	3'x3'	6"	3'x3' or 32" Dia	0.37 in2/ft	0.37 in /ft
SFG	3'x3'	6"	3'x3'	0.32 in2/ft	0.32 in /ft
SL	4'x4'	6"	n/a	0.34 in2/ft	0.34 in /ft
RH,RC,RG,SH,S1,FG	4'x4'	6"	3'x3' or 32" Dia	0.41 in /ft	0.41 in /ft
SH,S1,FG	4'x4'	6"	4'x4'	0.41 in /ft	0.41 in /ft
SFG	4'x4'	6"	4'x4'	0.32 in /ft	0.32 in /ft
SL	3'x5'	6"	n/a	0.39 in /ft	0.39 in /ft
RH,RC,RG,SH,S1,FG	3'x5'	6"	3'x3' or 32" Dia	0.48 in /ft	0.48 in /ft
SH,S1,FG	3'x5'	6"	3'x5'	0.48 in /ft	0.48 in /ft
SFG	3'x5'	6"	3'x5'	0.32 in /ft	0.32 in /ft
SL	4'x5'	6"	n/a	0.42 in /ft	0.42 in /ft
RH,RC,RG,SH,S1,FG	4'x5'	6"	3'x3' or 32" Dia	0.42 in /ft	0.42 in /ft
SH,S1,FG	4'x5'	6"	4'x4'	0.63 in /ft	0.63 in /ft
SH,S1,FG	4'x5'	6"	3'x5'	0.66 in /ft	0.66 in /ft
SL	5'x5'	6"	n/a	0.36 in /ft	0.36 in /ft
RH,RC,RG,SH,S1,FG	5'x5'	6"	3'x3' or 32" Dia	0.43 in /ft	0.43 in /ft
SH,S1,FG	5'x5'	6"	4'x4'	0.63 in /ft	0.63 in /ft
SH,S1,FG	5'x5'	6"	3'x5'	0.63 in /ft	0.63 in /ft
SL	5'x6'	6"/8"	n/a	0.48 in /ft	0.48 in /ft
RH,RC,RG,SH,S1,FG	5'x6'	6"/8"	3'x3' or 32" Dia	0.48 in /ft	0.48 in /ft
SH,S1,FG	5'x6'	6"/8"	4'x4'	0.60 in /ft	0.60 in /ft
SH,S1,FG	5'x6'	6"/8"	3'x5'	0.60 in /ft	0.60 in /ft
SL	6'x6'	6"/8"	n/a	0.43 in /ft	0.43 in /ft
RH,RC,RG,SH,S1,FG	6'x6'	6"/8"	3'x3' or 32" Dia	0.56 in /ft	0.56 in /ft
SH,S1,FG	6'x6'	6"/8"	4'x4'	0.56 in /ft	0.56 in /ft
SH,S1,FG	6'x6'	6"/8"	3'x5'	0.59 in /ft	0.59 in /ft
SL	8'x8'	8"/10" n/a		0.45 in /ft	0.45 in /ft
RH,RC,RG,SH,S1,FG	8'x8'	8"/10" 3'x3' or 32" Dia		0.45 in /ft	0.45 in /ft
SH,S1,FG	8'x8'	8"/10" 4'x4'		0.45in /ft	0.45in /ft
SH,S1,FG	8'x8'	8"/10" 3'x5'		0.45in /ft	0.45in /ft

2 See sheet PDD for corresponding wall thickness (W) of base unit or riser.

Construct cast-in-place reinforced concrete apron, when shown elsewhere in plans. Use Class "A" concrete. Apron is subsidiary to PSL. Apron is 1'-6" Min width around precast zone drain.

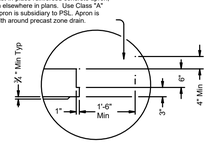

DETAIL "A"

(Reinforcing not shown for clarity)

When an apron is to be cast around PSL, use detail above to create an apron ledge on all 4 sides.

FABRICATION NOTES:
1. Locate penetration (Style 'RH'), ring and cover (Style 'RC'), ring and grate (Style 'RG'), and frame and grate (Style 'FG') in a corner. Only one penetration is allowed per slab lid.
2. Provide Class "H" concrete in accordance with Item 421 and having a minimum compressive strength of 5,000 psi.
3. Provide Grade 60 reinforcing steel or equivalent area of WWR.
4. Provide clear cover of ¼" to reinforcing from lower outside shoulder of slab for structural reinforcement, and 2" from top of slab for shrinkage and temperature reinforcement. Place short span reinforcing closest to surface.
5. Slabs with a thickness of 8" or greater require shrinkage and temperature reinforcing. Provide steel area = 0.11 in²/ft each way.
6. No substitution is allowed for diagonal #4 bars around openings.
7. Design tongue and groove joints for full closure on both shoulders. Minimum spigot depth is ½".
8. Provide lifting devices in conformance with Manufacturer's recommendations.

INSTALLATION NOTES:
1. Precast slab lids are intended for direct traffic and may be placed in roadway.
2. Seal tongue and groove joints with preformed or bulk mastic in conformance with Manufacturer's recommendations. Tongue and groove joints may be grouted no more than 1" between each section, or ½ the joint depth, whichever is greater.
3. Do not grout rubber gasket joints without Manufacturer's recommendation.
4. Initial installation of grade adjustment rings for Styles 'RH' and 'SH' is limited to 1'-0" Max as shown.
5. Grade adjustment rings for Styles 'RH' and 'SH' may be increased to 2'-0" Max when future construction affects final grade of structure. Make adjustments greater than 2'-0" with additional risers. Adjustments can be made up to Max depth shown on sheet PDD. Structure must be evaluated if Max depth will be exceeded.
6. Orient long dimension of grate slots perpendicular to traffic, unless noted otherwise on plans

GENERAL NOTES:
1. Designed according to ASTM C913.
2. Payment for lid is per Item 465, "Junction Boxes, Manholes, and Inlets" by type, style, size, and opening size (when applicable).

Cover dimensions are clear dimensions, unless noted otherwise.

N.T.S.

HL93 LOADING SHEET 2 OF 2

Texas Department of Transportation — Bridge Division Standard

PRECAST SLAB LID

PSL

FILE: prestd5x2Ledge	DN: TxDOT	CK: TxDOT	DW: TxDOT	CK: TxDOT
©TxDOT February 2020	CONT	SECT	JOB	HIGHWAY
REVISIONS	DIST		COUNTY	SHEET NO.

DATE:
FILE:

TOPOGRAPHIC
LOYALTY INNOVATION LEGACY
481 WINSCOTT RD, STE. 200 • BENBROOK, TEXAS 76126
TELEPHONE: (817) 744-7512 • FAX (817) 744-7554
TEXAS FIRM REGISTRATION NO. 18409
TEXAS FIRM REGISTRATION NO. 10042504
WWW.TOPOGRAPHIC.COM

CORZINE DRIVE STORM DRAIN IMPROVEMENTS
DALWORTHINGTON GARDENS, TARRANT COUNTY, TX

GRATE INLET RISER & JUNCTION BOX DETAILS

NO.	DATE	REVISION DESCRIPTION

PRELIMINARY, THIS DRAWING SHALL NOT BE RECORDED FOR ANY PURPOSE AND SHALL NOT BE USED OR VIEWED OR RELIED UPON AS FINAL CONSTRUCTION DRAWINGS.

PLANS PREPARED UNDER THE DIRECT SUPERVISION OF KYLON M. WILSON, P.E. TEXAS REGISTRATION NO. 77520

SHEET NO.

C8.1

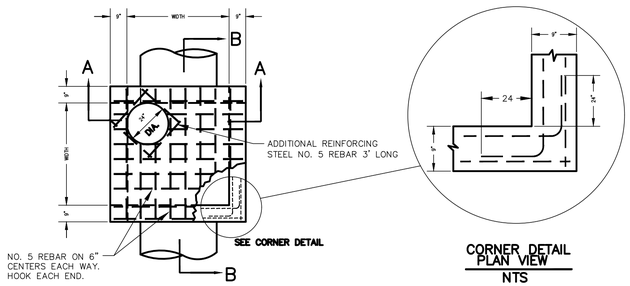

PLAN
NTS

CORNER DETAIL PLAN VIEW
NTS

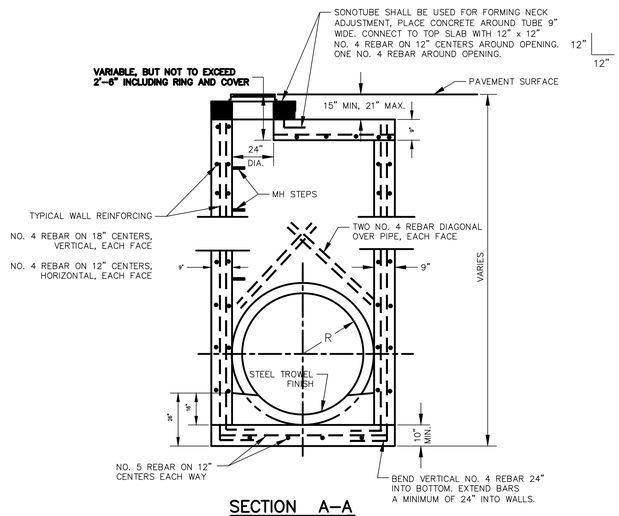

SECTION A–A
NTS

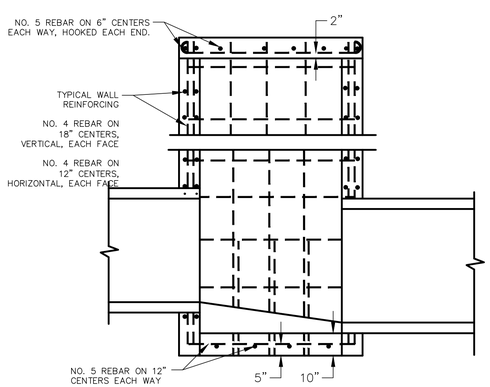

SECTION B–B
NTS

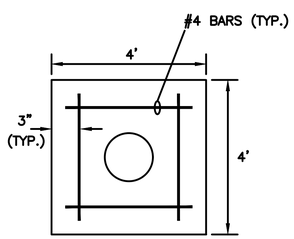

CONCRETE PAD
NTS

NOTES:

1. SLOPE INVERT OF JUNCTION BOX TO MATCH PIPE FLOW LINES.
2. LAYERS OF REINFORCING STEEL NEAREST THE INTERIOR AND EXTERIOR SURFACE SHALL HAVE A COVER OF 2 INCHES TO THE BARS, UNLESS OTHERWISE NOTED.
3. CONCRETE SHALL BE CLASS C, 5 1/2 SACK, 3600 PSI.
4. REINFORCING STEEL TO BE GRADE 60.
5. TRAFFIC RATED MANHOLE LID SHALL BE USED UNLESS OTHERWISE SPECIFIED. (*SEE STORM DRAIN MANHOLE COVER & FRAME DETAIL)
6. OUTSIDE CONCRETE PAVED AREAS, JUNCTION BOXES SHALL BE INSTALLED WITH 4'X4' CONCRETE PAD WITH MANHOLE COVERS IN CENTER OF PAD. THE CONCRETE PAD SHALL MATCH PAVEMENT THICKNESS WITHIN ASPHALT PAVEMENT, OR BE 6" THICK OUTSIDE ALL PAVED AREAS. CONCRETE PADS SHALL BE REINFORCED WITH FOUR NO. 4 REBARS AROUND THE CONCRETE PAD.
7. STEPS ARE REQUIRED UNDER ALL MANHOLES FOR JUNCTION BOXES WITH A DEPTH OF 4 FEET OR GREATER (*SEE NON–CORROSIVE STEP DETAIL).

JUNCTION BOX MAY BE RECTANGULAR BUT NOT LESS THAN 4 FEET IN SHORT DIRECTION.

STORM DRAIN JUNCTION BOX (4', 5' OR 6' WIDTHS)
NTS
REV: 4/29/21

CITY OF ARLINGTON, TEXAS

STORM DRAIN JUNCTION BOX

DATE:	SCALE: NTS	SHEET____OF____
DESIGNED BY:	DRAWN BY:	CHECKED BY:

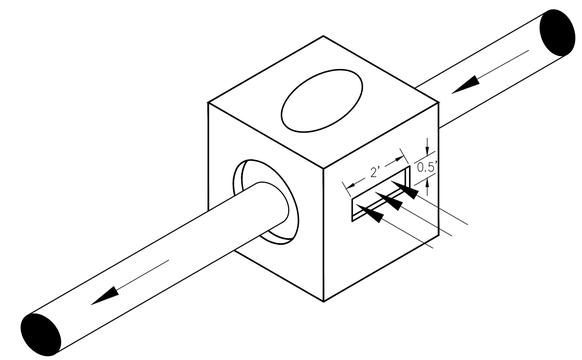

N.T.S.

RECTANGULAR OPENING ON JUNCTION BOX

C =	2.64	Discharge coefficient (check Table 2.4)
L =	2.00	Bottom width of weir (ft)
H =	0.50	Water depth from bottom of weir (ft)
Q =	1.87	Release rate (cfs)

TOPOGRAPHIC
LOYALTY INNOVATION LEGACY
481 WINSCOTT RD, STE. 200 • BENBROOK, TEXAS 76126
TELEPHONE: (817) 744-7512 • FAX (817) 744-7554
TEXAS FIRM REGISTRATION NO. 18409
TEXAS FIRM REGISTRATION NO. 10042504
WWW.TOPOGRAPHIC.COM

CORZINE DRIVE STORM DRAIN IMPROVEMENTS
DALWORTHINGTON GARDENS, TARRANT COUNTY, TX

4'X4' JUNCTION BOX DETAILS

NO.	DATE	REVISION DESCRIPTION

PRELIMINARY, THIS DRAWING SHALL NOT BE RECORDED FOR ANY PURPOSE AND SHALL NOT BE USED OR VIEWED OR RELIED UPON AS FINAL CONSTRUCTION DRAWINGS.

PLANS PREPARED UNDER THE DIRECT SUPERVISION OF KYLON M. WILSON, P.E. TEXAS REGISTRATION NO. 77520

SHEET NO.

C8.2

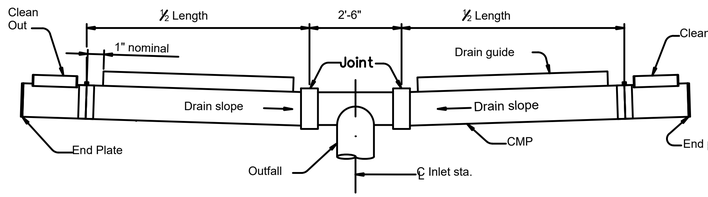

TYPICAL TYPE "T" DRAIN INSTALLATION

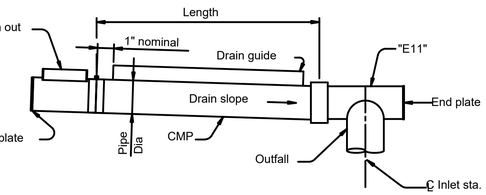

TYPICAL TYPE "L" DRAIN INSTALLATION

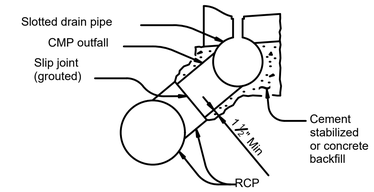

BACKFILL DETAIL AT OUTFALL

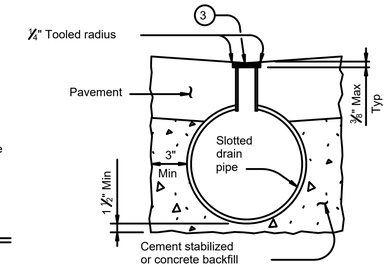

TYPICAL BACKFILL DETAIL

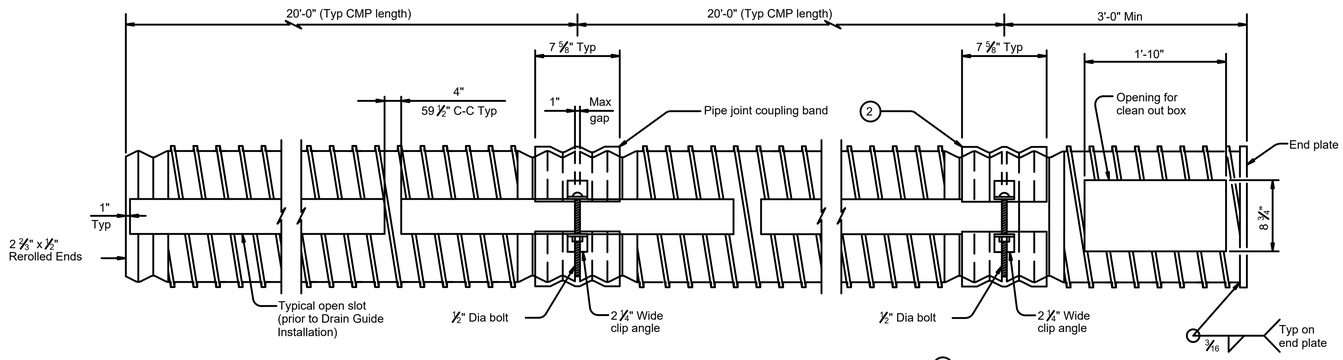

SLOTTED CORRUGATED METAL PIPE (CMP) DETAIL 1

Showing Type IR pipe

1. Provide 16 gauge (Min) x 12" to 36" Dia Corrugated Metal Pipe (Type I ~ 2 ⅔" x ½" corrugations or Type IR ~ ¾" x ¾" x 7 ½" corrugations)
2. Alternate methods of joining lengths of pipe, as recommended by the manufacturer, may be used with the approval of the Engineer.
3. Wood Strip (Nom ⅜" Max x 2 ½"). Wood strip may be omitted if suitable protection is provided during pavement placement.
4. Install frame and grate flush with pavement and centered over clean out box.
5. See pavement details for slab thickness.

FABRICATION NOTES:

Provide circular corrugated steel pipe, galvanized or aluminized, in accordance with Item 460, "Corrugated Metal Pipe".

Provide drain guide assemblies conforming to Item 474, "Linear Drains".

Fabricate bearing bars, cross bar spacers, end plates, and clean out boxes from ⅜" plate, ASTM A36. Galvanize in accordance with Item 445, "Galvanizing".

Furnish slotted drain in 20'-0" lengths, when practical, to minimize number of joints.

Furnish pedestrian cap when specified in the plans.

INSTALLATION NOTES:

Backfill trenches for slotted drains and outfall pipe with low strength concrete (minimum 2 sacks or cement per cubic yard) or cement stabilized backfill as shown or directed by the Engineer.

Place suitable compressible material in the outfall connection slip joint, to retain grout during curing.

Provide heavy duty frame and grate from one of the following, or approved equal (clear opening 22" x 8 ¾" Min, 25 ½" x 12 Max).

Neenah R-3471
EJ V-4274
USF 4621 frame and 6296 grate

GENERAL NOTES:

Unless otherwise shown on the plans, the Contractor may furnish any of the designs as shown.

Frame and grate is subsidiary to Slotted Drain.

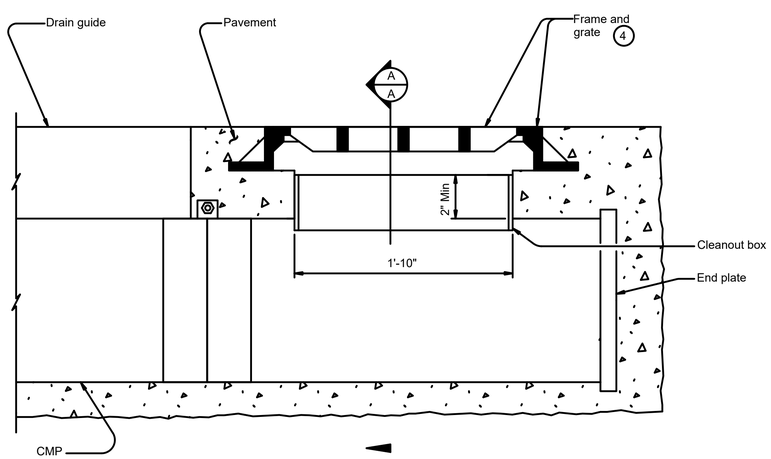

CLEAN OUT BOX ELEVATION

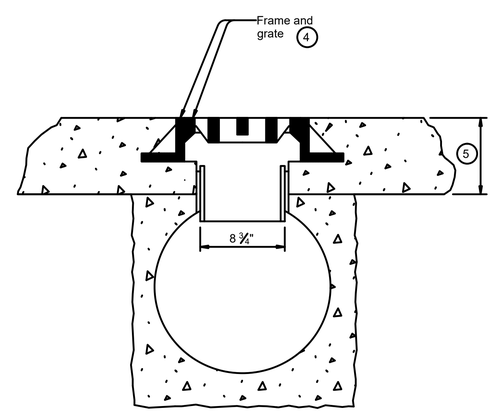

SECTION A-A

SHEET 1 OF 2

Texas Department of Transportation — Bridge Division Standard

ROADWAY LINEAR DRAIN (SLOTTED DRAIN)

SD

FILE: sdstds01-20.dgn	DN: TxDOT	CK: TxDOT	DW: DKC	CK: AES
©TxDOT February 2020	CONT	SECT	JOB	HIGHWAY
REVISIONS				
	DIST	COUNTY		SHEET NO.

DISCLAIMER: The use of this standard is governed by the "Texas Engineering Practice Act". No warranty of any kind is made by TxDOT for any purpose whatsoever. TxDOT assumes no responsibility for the conversion of this standard to other formats or for incorrect results or damages resulting from its use.

DATE:
FILE:

TOPOGRAPHIC
LOYALTY INNOVATION LEGACY
481 WINSCOTT RD, STE. 200 • BENBROOK, TEXAS 76126
TELEPHONE: (817) 744-7512 • FAX (817) 744-7554
TEXAS FIRM REGISTRATION NO. 18409
TEXAS FIRM REGISTRATION NO. 10042504
WWW.TOPOGRAPHIC.COM

CORZINE DRIVE STORM DRAIN IMPROVEMENTS
DALWORTHINGTON GARDENS, TARRANT COUNTY, TX

SLOTTED DRAIN DETAIL

NO.	DATE	REVISION DESCRIPTION

PRELIMINARY, THIS DRAWING SHALL NOT BE RECORDED FOR ANY PURPOSE AND SHALL NOT BE USED OR VIEWED OR RELIED UPON AS FINAL CONSTRUCTION DRAWINGS.

PLANS PREPARED UNDER THE DIRECT SUPERVISION OF KYLON M. WILSON, P.E. TEXAS REGISTRATION NO. 77520

SHEET NO.

C8.3

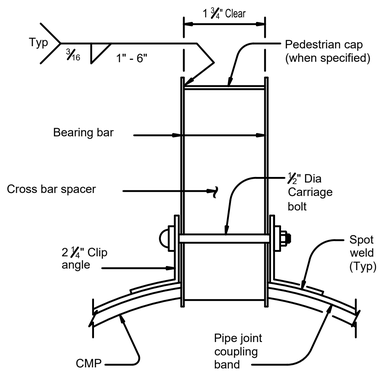

PIPE JOINT CONNECTION TRANSVERSE SECTION

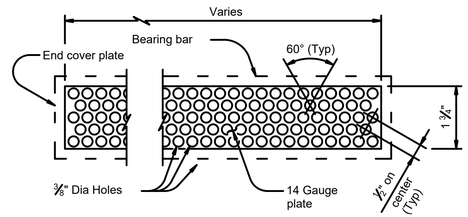

PEDESTRIAN CAP DETAIL

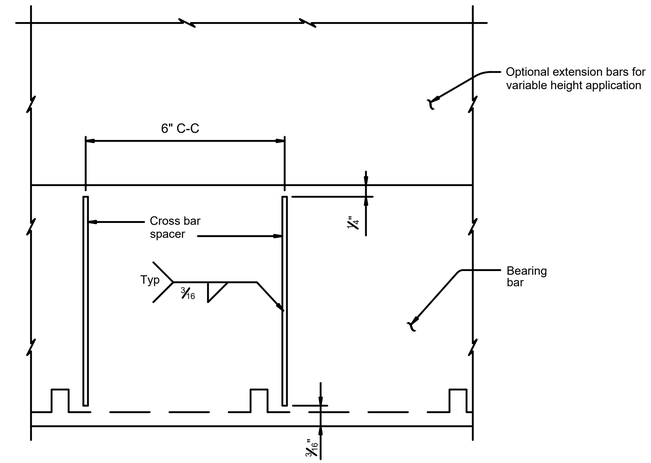

SECTION B-B
(WITH RECTANGULAR SPACERS)

Showing installation of cross bar spacers in longitudinal section.

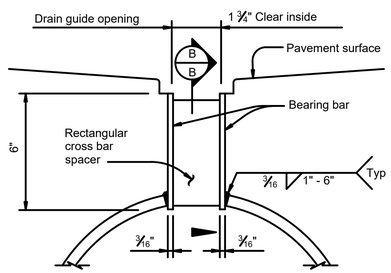

STANDARD HEIGHT
Showing rectangular spacers.

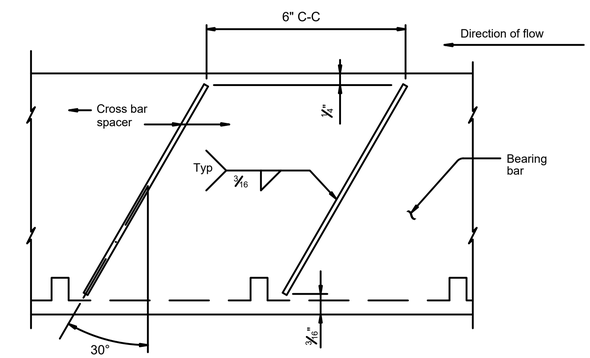

SECTION C-C
(WITH TAPERED SPACERS)

Showing installation of cross bar spacers in longitudinal section.

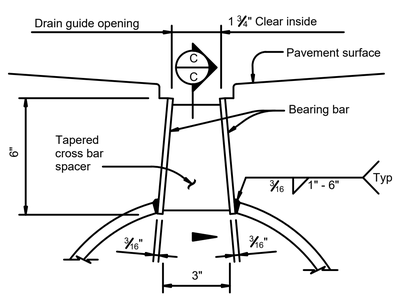

STANDARD HEIGHT
Showing tapered spacers.

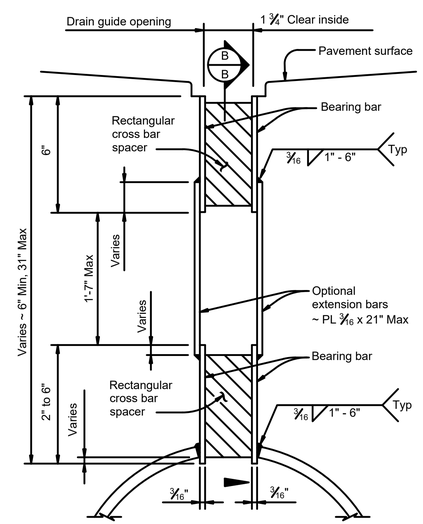

VARIABLE HEIGHT
Showing rectangular spacers and extension.

TYPICAL SECTIONS THRU DRAIN GUIDE INSTALLATION

SHEET 2 OF 2

Texas Department of Transportation — Bridge Division Standard

ROADWAY LINEAR DRAIN
(SLOTTED DRAIN)

SD

FILE: sdsltds01-20.dgn	DN: TxDOT	CK: TxDOT	DW: DKC	CK: AES
©TxDOT February 2020	CONT	SECT	JOB	HIGHWAY
REVISIONS				
	DIST	COUNTY		SHEET NO.

DISCLAIMER: The use of this standard is governed by the "Texas Engineering Practice Act". No warranty of any kind is made by TxDOT for any purpose whatsoever. TxDOT assumes no responsibility for the conversion of this standard to other formats or for incorrect results or damages resulting from its use.

DATE:
FILE:

TOPOGRAPHIC
LOYALTY INNOVATION LEGACY
481 WINSCOTT RD, STE. 200 • BENBROOK, TEXAS 76126
TELEPHONE: (817) 744-7512 • FAX (817) 744-7554
TEXAS FIRM REGISTRATION NO. 18409
TEXAS FIRM REGISTRATION NO. 10042504
WWW.TOPOGRAPHIC.COM

CORZINE DRIVE STORM DRAIN IMPROVEMENTS
DALWORTHINGTON GARDENS, TARRANT COUNTY, TX

SLOTTED DRAIN DETAIL

NO.	DATE	REVISION DESCRIPTION

PRELIMINARY, THIS DRAWING SHALL NOT BE RECORDED FOR ANY PURPOSE AND SHALL NOT BE USED OR VIEWED OR RELIED UPON AS FINAL CONSTRUCTION DRAWINGS.

PLANS PREPARED UNDER THE DIRECT SUPERVISION OF KYLON M. WILSON, P.E. TEXAS REGISTRATION NO. 77520

PRELIMINARY

SHEET NO.

C8.4